Manuals

Parts

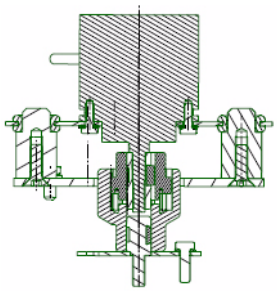

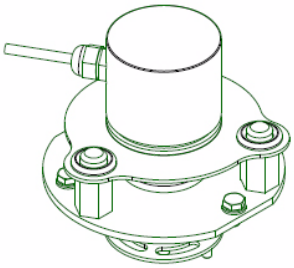

Location	: 5940
Order nr.	: 106815
Machine nr.	: 2015050036
FO nr.	: 783538
Machine name	: Tail Feather Puller
Date	: 27 May, 2015

meyn

Poultry Processing Solutions

Description & Usage of the part manual

This manual consists out of Part list tables and associated Drawings.

Tables with parts.

Meyn machines are modular designed. A Part-manual starts with the top-module working its way down to the separate components (top-down). The table beneath the module-number sums up the essential parts of this module.

Pos.	Part position number in the drawing.
Article nr.	The part number used when ordering parts. To enhance article comprehension an **article picture-view** has been embedded. Usually only single-parts have a picture-view. Press the article number and it will show.
Description	The part name used when ordering parts.
+	Indication that this module consists out of one or more sub-modules, click the symbol to jump to the sub-module page.
Qty	How many times this article is used in this (sub)module (not the total quantity in the machine)

Partlist and associated Drawings

The drawing enables you to locate parts mentioned in the part list table.
A drawing always belongs to the previous partlist. You can verify this by checking the article number at the top of the Partlist and the Drawing.

Machine number:

A machine number is configured out of three sections: example 200810043

- 2008 = the year the machine has been manufactured
- 10 = the month the machine has been manufactured
- 0043 = the production number

Ordering machine parts:

Parts can be ordered by specifying the part article-number and machine number. The machine number is shown at the top of each part list page and is punched into the machine identification plate.

Dowmload your Part- and Usermanual(s):

Meyn offers advanced online services for its customers:
- Order spare parts.
- View and download equipment manuals.
- Have online access to our After Sales Support facilities

Meyn Food Processing Technology B.V.
Westeinde 6, P.O. Box 16, 1510 AA Oostzaan, The Netherlands
Phone: +31 (0)20 2045 000, Fax:++31 (0)20 2045 001,
E-mail: sales@meyn.nl, Website: www.meyn.nl,
K.v.K. Zaandam nr. 35015165

BC-0406-E VERENTREKKER STAART KIP

Pos	Article nr	Description	Qty
1	0148.0044.A00.01	Tail feather puller R with fra	1
2	89.3206.904.0603	REDUCER, MOTOR/2.2KW/QUILL PUL	1

0148.0044.A00.01 Tail feather puller R with fra

Pos	Article nr	Description	Qty
1	0148.0044.A00.05	Inner frame for TFP	1
2	0351.0004.A00.06	Moving frame	1
3	0148.0044.000.04	Cut up frame winch 250KG	1
4	0148.0044.000.07	Wheel holder	4
5	0148.0044.002.01	U profile	4
6	89.0805.015.0001	Tap Bolt M10 X 20	10
7	89.0907.015.0005	Washer Medium M 10	32
8	89.0914.016.0003	Lock Nut M 10	14
9	89.0865.015.0003	Bolt M10 X110	8
10	89.1312.904.0009	Anchor M12	4
11	89.1312.904.0004	Anchor M12X160	4
12	0148.0044.A00.04	Support frame with legs	1
13	0990.LB00.000.05	Bearing	2
14	0148.0044.A00.11	Tube square for TFP - assembly	1
15	0148.0044.A00.13	Tube square for FTP upper part	1
16	0148.0044.A00.15	Container lock	1
17	89.0866.015.0007	Bolt M12 X 45	8
18	89.0907.015.0006	Washer Medium M 12 Low	9
19	89.0902.015.0012	Nutm12X1,25	8
20	0351.0004.A00.05	TFP guide - main assembly	1
21	0351.0004.A00.00	TFP role frame - right	1
22	0990.T002.000.07	Suspension Bracket	2
23	0351.0004.A00.25	Suspension bracket	2
24	0351.0004.A00.17	Installation bracket	2
25	0990.W000.016.00	handwiel. d180g12	1
26	89.0633.141.0006	BEARING cil. 30/38x30	4
27	89.0907.015.0055	Washer M 6	1
28	89.0803.015.0001	Tap Bolt M 6 X 25	1
29	89.1302.015.0005	Key 4x4x16	1
30	0148.0044.A02.01	Guide spindle	1
31	89.0904.015.0004	Cap Nut M 12	1
32	0990.A800.000.01	Toggle Nut M20	1
33	0351.0004.A00.19	Slings element - assy	2

© Meyn Food Processing Technology B.V.

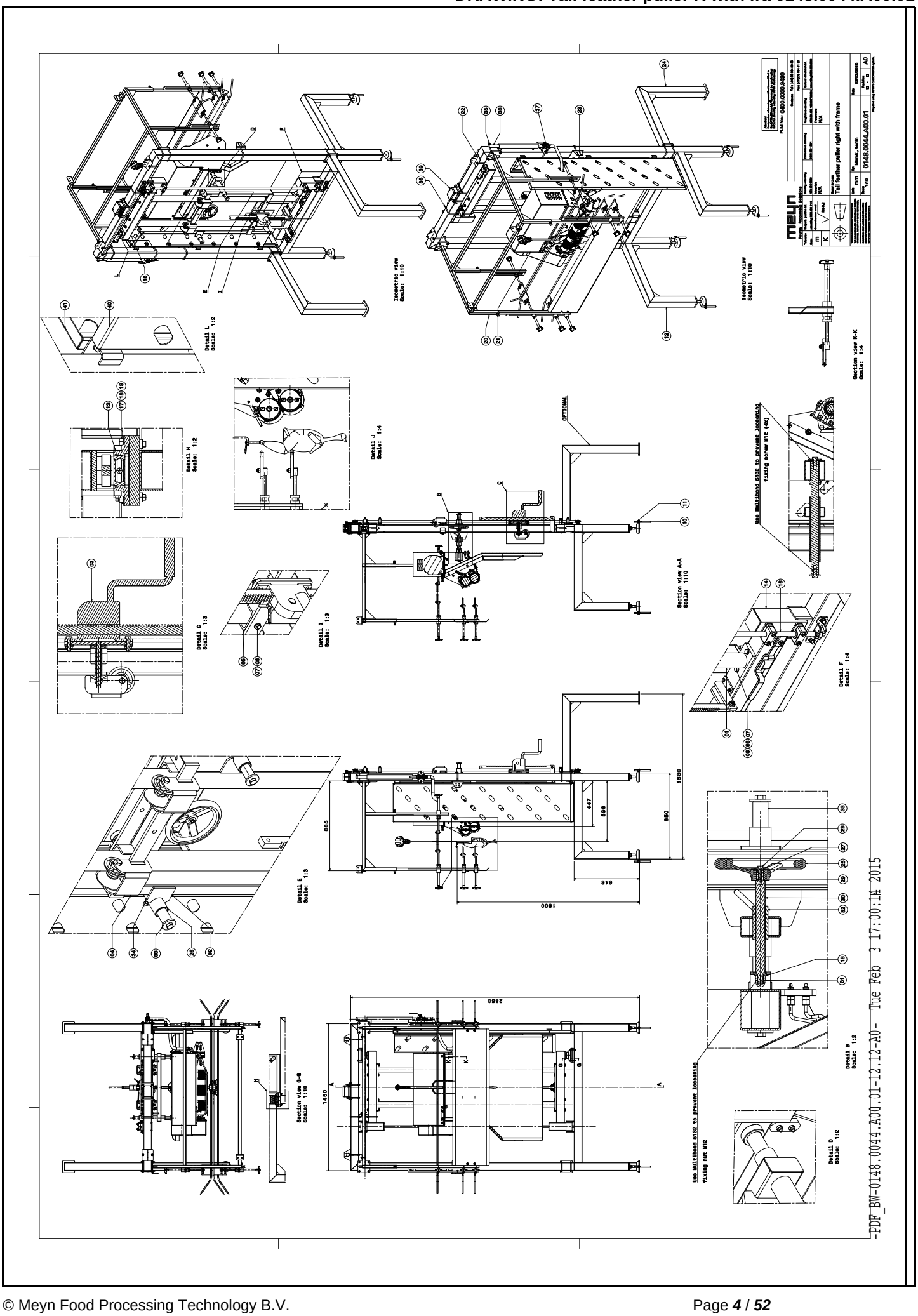
Isometric view
Scale: 1:10
Isometric view
Scale: 1:10
Detail L
Scale: 1:2
Section view K-K
Scale: 1:4
Detail H
Scale: 1:2
Detail J
Scale: 1:4
OPTIONAL
Use Multibond 6192 to prevent loosening
fixing screw M12 (4x)
Detail G
Scale: 1:3
Detail I
Scale: 1:3
Section view A-A
Scale: 1:10
Detail F
Scale: 1:4
Detail E
Scale: 1:3
Section view G-G
Scale: 1:10
Use Multibond 6192 to prevent loosening
fixing nut M12
Detail B
Scale: 1:2
Detail D
Scale: 1:2
meyn
Tail feather puller right with frame
0148.0044.A00.01
A0
-PDF BW-0148.0044.A00.01-12.12-A0- Tue Feb 3 17:00:14 2015

0148.0044.A00.01 Tail feather puller R with fra

Pos	Article nr	Description	Qty
34	89.0804.015.0019	Tap Bolt M 8 X 25	2
35	89.2475.010.0003	Hose nipple 22-32 B13	2
36	0148.0044.A00.21	Mounting bracket sensor set	1
37	0148.0044.B00.19	Valve holder - assy	1
38	89.2464.153.0026	Hose 19x5 L=2300	5
39	0148.0044.A00.20	TFP electrical box set	1
40	0148.0044.006.01	Rear guard	1
41	0148.0044.007.01	Side guard	1

© Meyn Food Processing Technology B.V.

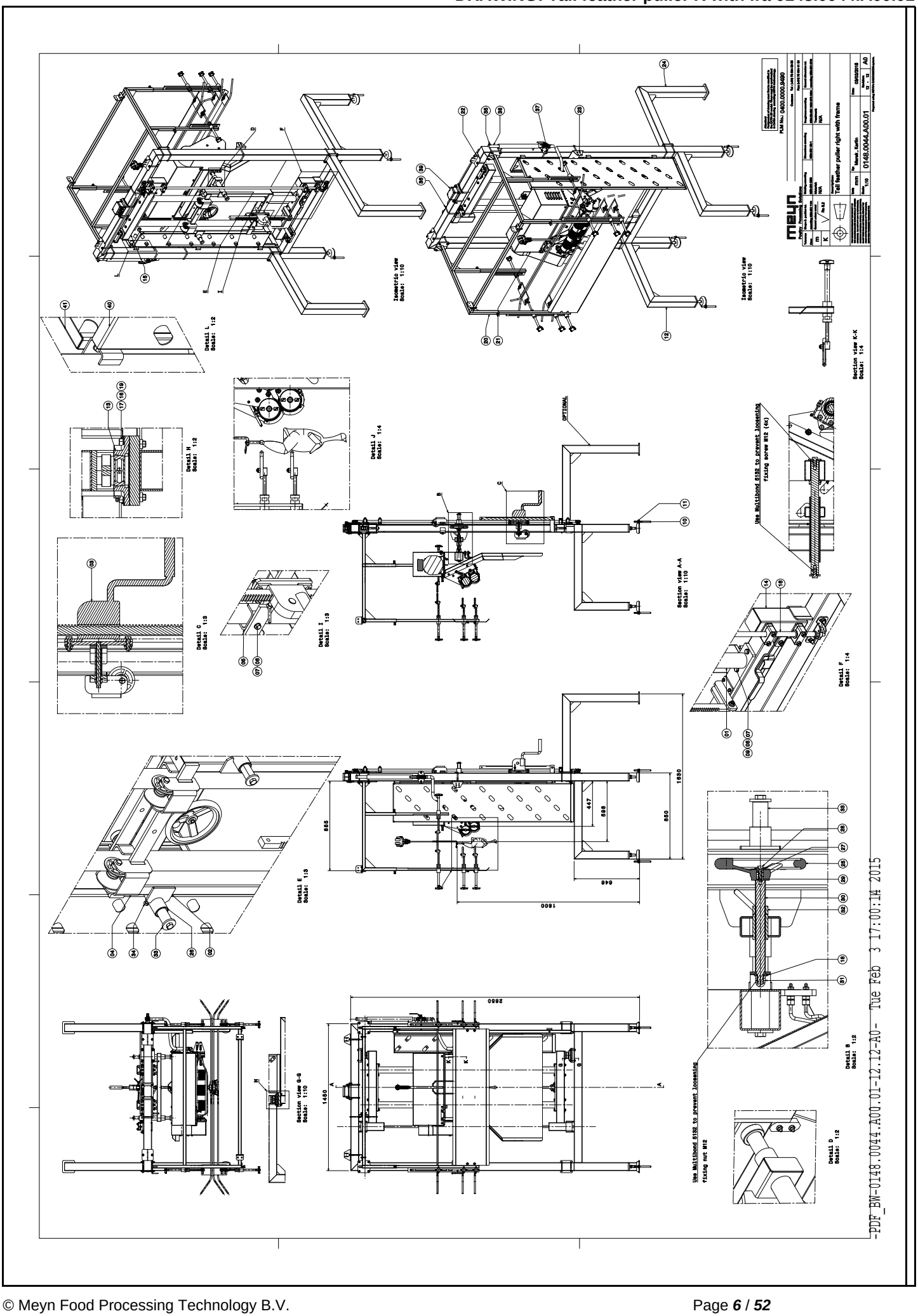
Isometric view
Scale: 1:10
Isometric view
Scale: 1:10
Detail L
Scale: 1:2
Section view K-K
Scale: 1:4
Detail H
Scale: 1:2
Detail J
Scale: 1:4
OPTIONAL
Use Multibond 6152 to prevent loosening
fixing screw M12 (4x)
Detail G
Scale: 1:3
Detail I
Scale: 1:3
Section view A-A
Scale: 1:10
Detail F
Scale: 1:4
Detail E
Scale: 1:3
885
447
588
1630
860
648
1800
Section view G-G
Scale: 1:10
2850
1450
Use Multibond 6152 to prevent loosening
fixing nut M12
Detail B
Scale: 1:2
Detail D
Scale: 1:2
Tail feather puller right with frame
0148.0044.A00.01
-PDF_BW-0148.0044.A00.01-12.12-A0- Tue Feb 3 17:00:14 2015

0148.0044.000.04 Cut up frame winch 250KG

Pos	Article nr	Description	Qty
1	89.2001.904.0001	WINCH, RACK/KILLER/PICKER	1
2	0148.0044.000.05	Rack winch fixing	1
3	0148.0044.001.04	Tube 20x2 L=80	1
4	0148.0044.000.06	Mounting plate cut up frame	1
5	89.0907.015.0006	Washer Medium M 12 Low	1
6	89.0914.015.0003	Lock Nut M 12	1
7	89.0865.015.0012	Bolt M10x35 Old art.nr.: 99.1	2
8	89.0907.015.0056	Tap Bolt	3
9	89.0914.015.0002	Lock Nut M10	3
10	89.0865.015.0010	Bolt M10 X 55	1
11	89.0907.015.0022	Washer M 6	4
12	89.0803.015.0016	Tap Bolt M 6 X 20	4
13	0148.0044.000.12	Shifting lock	1

© Meyn Food Processing Technology B.V.

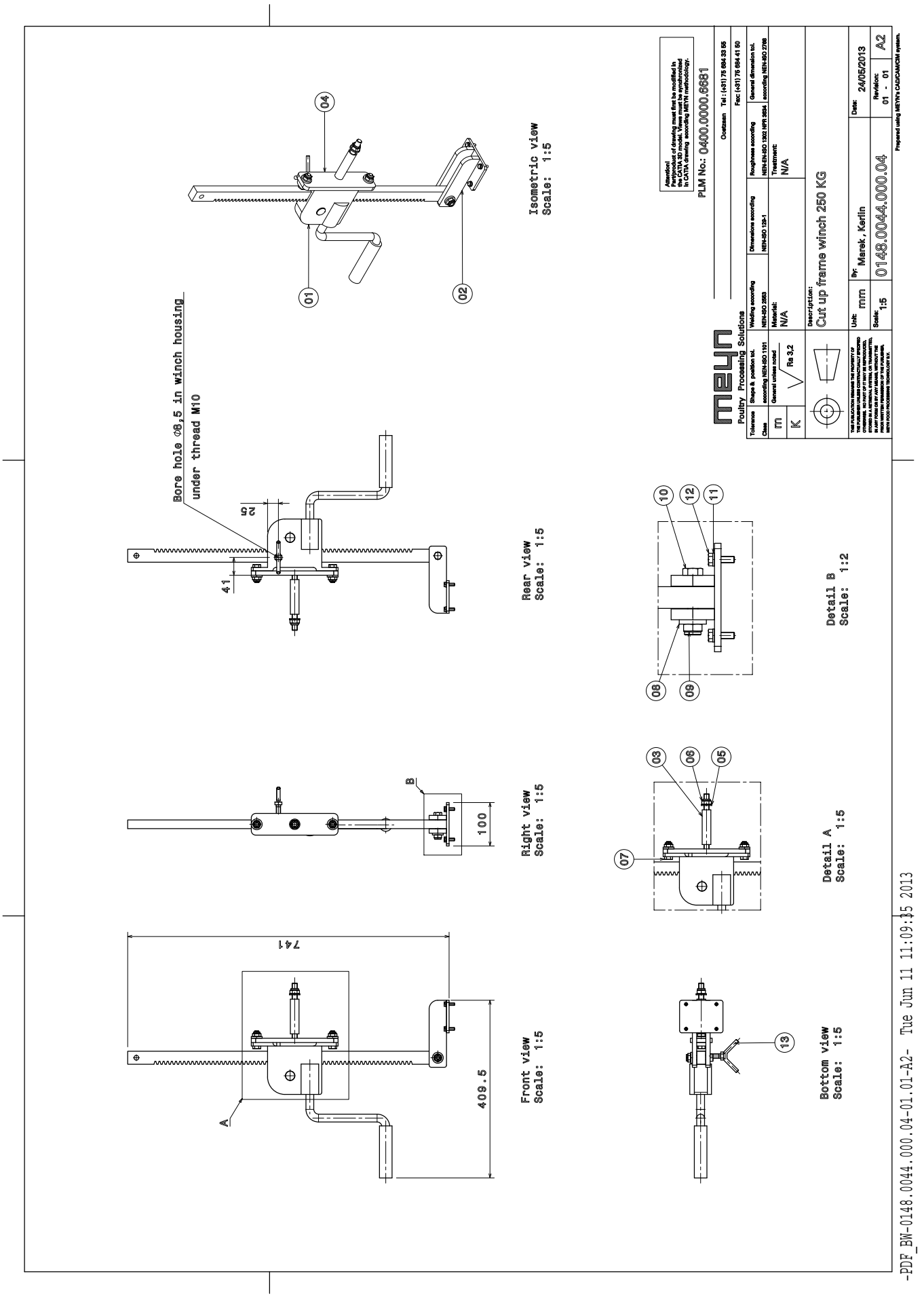
Isometric view
Scale: 1:5
Rear view
Scale: 1:5
Right view
Scale: 1:5
Front view
Scale: 1:5
Detail B
Scale: 1:2
Detail A
Scale: 1:5
Bottom view
Scale: 1:5
Bore hole Ø8,5 in winch housing
under thread M10
741
409.5
100
41
25
01
02
03
04
05
06
07
08
09
10
11
12
13
A
B
Attention!
Prototype/product of drawing must first be modified in the CATIA 3D model. Views must be synchronized in CATIA drawing according MEYN methodology.
PLM No.: 0400.0000.6681
Oostzaan Tel.: (+31) 75 684 33 55
Fax: (+31) 75 684 41 50
Poultry Processing Solutions
Tolerance
Class
Shape & position tol. according NEN-ISO 1101
General unless noted
Welding according NEN-ISO 2553
Material: N/A
Dimensions according NEN-ISO 129-1
Roughness according NEN-EN-ISO 1302 NPR 3664
Treatment: N/A
General dimension tol. according NEN-ISO 2768
Description:
Cut up frame winch 250 KG
Unit: mm
Scale: 1:5
By: Marek, Kerlin
Date: 24/05/2013
0148.0044.000.04
Revision: 01 - 01
A2
Prepared using MEYN's CAD/CAM/CIM system.
-PDF_BW-0148.0044.000.04-01.01-A2- Tue Jun 11 11:09:35 2013

0148.0044.000.07 Wheel holder

Pos	Article nr	Description	Qty
1	0148.0044.000.08	Wheel holder - welding assy	4
2	0148.0044.001.07	Ring 30x20 L=10	4
3	0990.W006.001.00	Guide Wheel	4
4	89.0805.015.0002	Tap Bolt M10 X 16	8
5	89.0805.015.0003	Tap Bolt M10 X 30	4
6	89.0907.015.0005	Washer Medium M 10	4
7	89.0901.015.0007	Nut M 10	4
8	0990.DF01.004.00	Shaft	4

© Meyn Food Processing Technology B.V.

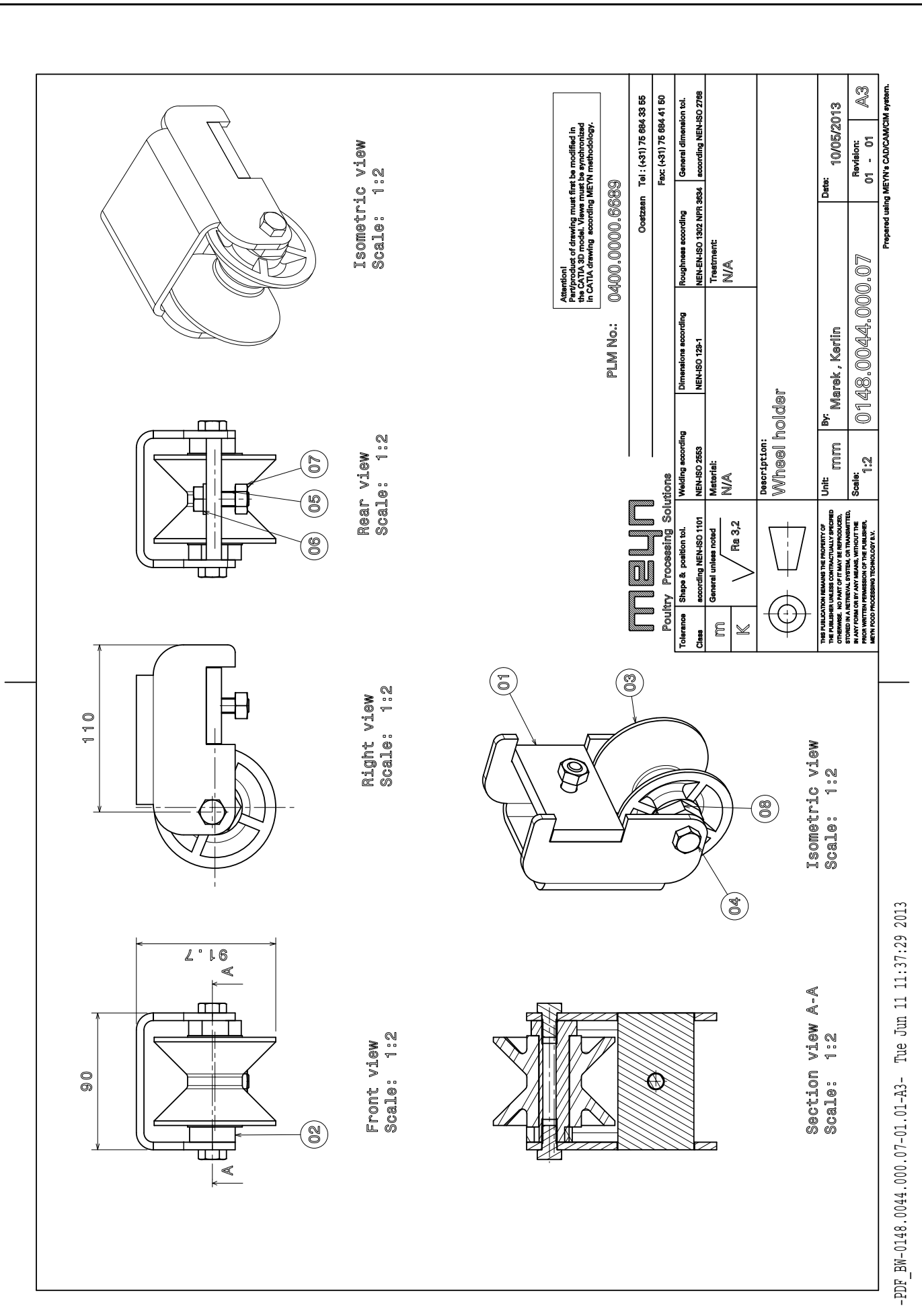
Isometric view
Scale: 1:2
Rear view
Scale: 1:2
Right view
Scale: 1:2
Front view
Scale: 1:2
Section view A-A
Scale: 1:2
Isometric view
Scale: 1:2
110
90
91.7
A
A
01
02
03
04
05
06
07
08
Attention!
Part/product of drawing must first be modified in the CATIA 3D model. Views must be synchronized in CATIA drawing according MEYN methodology.
PLM No.: 0400.0000.6689
Oostzaan Tel : (+31) 75 684 33 55
Fax: (+31) 75 684 41 50
meyn
Poultry Processing Solutions
Tolerance
Class
Shape & position tol.
according NEN-ISO 1101
General unless noted
m
K
Welding according
NEN-ISO 2553
Ra 3,2
Dimensions according
NEN-ISO 129-1
Roughness according
NEN-EN-ISO 1302 NPR 3634
General dimension tol.
according NEN-ISO 2768
Material:
N/A
Treatment:
N/A
Description:
Wheel holder
THIS PUBLICATION REMAINS THE PROPERTY OF MEYN FOOD PROCESSING TECHNOLOGY B.V. UNLESS OTHERWISE. NO PART OF IT MAY BE REPRODUCED, STORED IN A RETRIEVAL SYSTEM, OR TRANSMITTED, IN ANY FORM OR BY ANY MEANS, WITHOUT THE PRIOR WRITTEN PERMISSION OF THE PUBLISHER, MEYN FOOD PROCESSING TECHNOLOGY B.V.
Unit: mm
By: Marek,Kerlin
Date: 10/05/2013
Scale: 1:2
0148.0044.000.07
Revision: 01 - 01
A3
Prepared using MEYN's CAD/CAM/CIM system.
-PDF BW-0148.0044.000.07-01.01-A3- Tue Jun 11 11:37:29 2013

0148.0044.A00.04 Support frame with legs

Pos	Article nr	Description	Qty
1	0148.0044.A00.16	Support frame	1
2	05.06.020.029	Adjustable foot	4
3	89.0901.015.0006	Nut M 20	4
4	89.0914.015.0002	Lock Nut M10	4
5	0351.0004.A00.22	Cam holder - assy	2
6	89.0907.015.0005	Washer Medium M 10	4

© Meyn Food Processing Technology B.V.

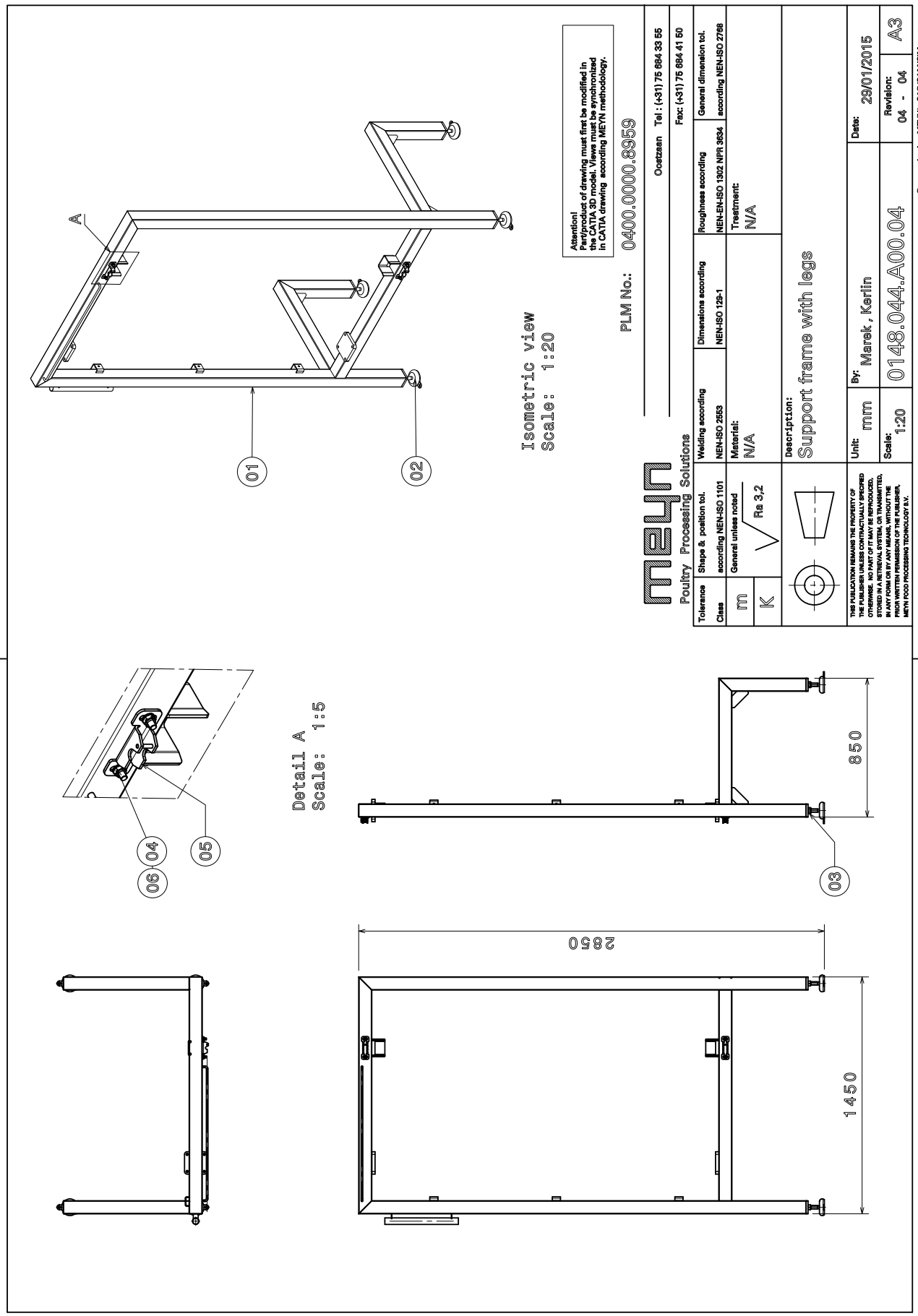
A
01
02
Isometric view
Scale: 1:20
Attention!
Part/product of drawing must first be modified in the CATIA 3D model. Views must be synchronized in CATIA drawing according MEYN methodology.
PLM No.: 0400.0000.8959
Oostzaan Tel : (+31) 75 684 33 55
Fax: (+31) 75 684 41 50
meyn
Poultry Processing Solutions
Tolerance Class m K
Shape & position tol. according NEN-ISO 1101
General unless noted Ra 3,2
Welding according NEN-ISO 2553
Material: N/A
Dimensions according NEN-ISO 129-1
Roughness according NEN-EN-ISO 1302 NPR 3634
General dimension tol. according NEN-ISO 2768
Treatment: N/A
Description: Support frame with legs
Unit: mm
Scale: 1:20
By: Marek, Kerlin
Date: 29/01/2015
Revision: 04 - 04
0148.044.A00.04
A3
Prepared using MEYN's CAD/CAM/CIM system.
THIS PUBLICATION REMAINS THE PROPERTY OF THE PUBLISHER. UNLESS OTHERWISE CONTRACTUALLY AGREED OTHERWISE, NO PART OF IT MAY BE REPRODUCED, STORED IN A RETRIEVAL SYSTEM, OR TRANSMITTED, IN ANY FORM OR BY ANY MEANS, WITHOUT THE PRIOR WRITTEN PERMISSION OF THE PUBLISHER, MEYN FOOD PROCESSING TECHNOLOGY B.V.
Detail A
Scale: 1:5
06 04
05
03
850
2850
1450
-PDF BW-0148.0044.A00.04-04.04-A3- Tue Feb 3 16:26:52 2015

0990.LB00.000.05 Bearing

Pos	Article nr	Description	Qty
1	0990.LB00.000.06	Bearing Housing	2
2	89.0700.011.0005	Bearing	2
3	89.2360.015.0001	GRease Nipple G 1/8"" Hr	2

© Meyn Food Processing Technology B.V.

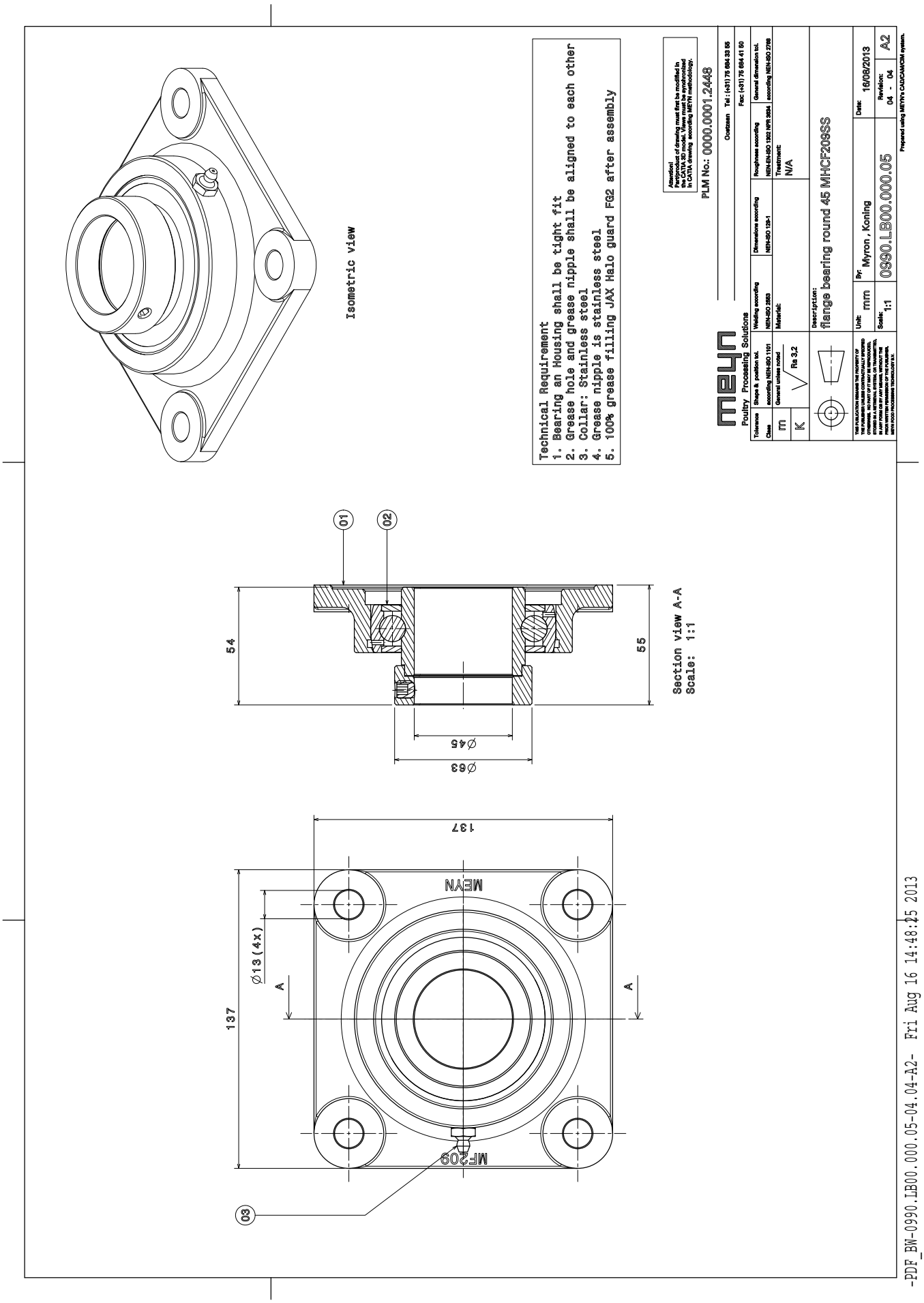

-PDF_BW-0990.LB00.000.05-04.04-A2- Fri Aug 16 14:48:25 2013

0148.0044.A00.11 Tube square for TFP - assembly

Pos	Article nr	Description	Qty
1	0990.A1B5.002.00	Fasteningplate holes 70x30x2	2
2	0700.0010.A05.62	Tube guide	2
3	0990.A1B5.003.00	Fasteningplate holes 70x30x12	2
4	89.0914.015.0002	Lock Nut M10	4
5	0148.0044.A00.10	Tube square for FTP - weldassy	1

© Meyn Food Processing Technology B.V.

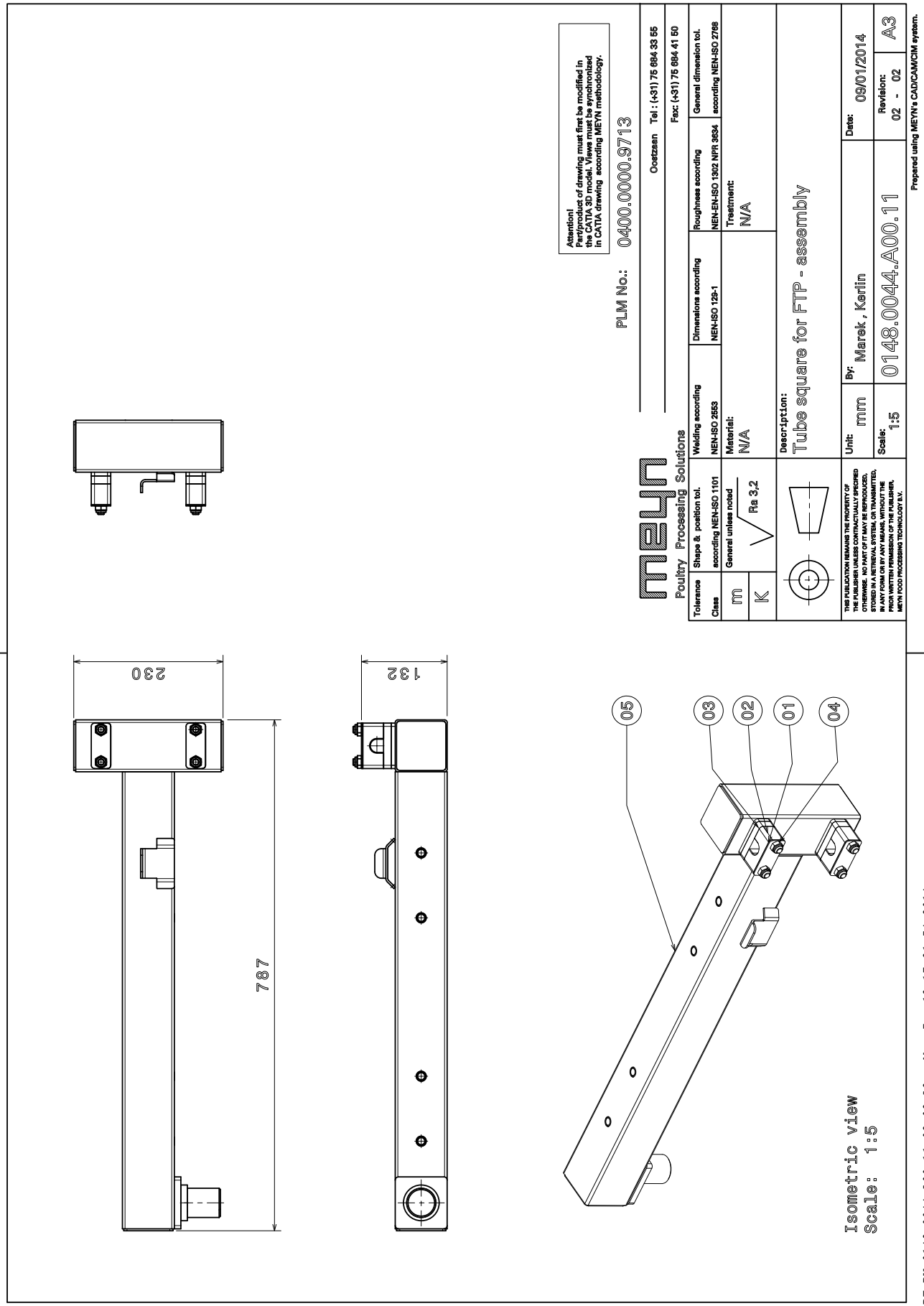
Attention!
Part/product of drawing must first be modified in the CATIA 3D model. Views must be synchronized in CATIA drawing according MEYN methodology.
PLM No.: 0400.0000.9713
Oostzaan Tel : (+31) 75 684 33 55
Fax: (+31) 75 684 41 50
meyn
Poultry Processing Solutions
Tolerance Class m K
Shape & position tol. according NEN-ISO 1101
General unless noted Ra 3,2
Welding according NEN-ISO 2553
Material: N/A
Dimensions according NEN-ISO 129-1
Roughness according NEN-EN-ISO 1302 NPR 3634
General dimension tol. according NEN-ISO 2768
Treatment: N/A
Description: Tube square for FTP - assembly
THIS PUBLICATION REMAINS THE PROPERTY OF MEYN FOOD PROCESSING TECHNOLOGY B.V. UNLESS OTHERWISE. NO PART OF IT MAY BE REPRODUCED, STORED IN A RETRIEVAL SYSTEM, OR TRANSMITTED, IN ANY FORM OR BY ANY MEANS, WITHOUT THE PRIOR WRITTEN PERMISSION OF THE PUBLISHER, MEYN FOOD PROCESSING TECHNOLOGY B.V.
Unit: mm
By: Marek, Kerlin
Date: 09/01/2014
Scale: 1:5
0148.0044.A00.11
Revision: 02 - 02
A3
Prepared using MEYN's CAD/CAM/CIM system.
230
787
132
05
03
02
01
04
Isometric view
Scale: 1:5
-PDF BW-0148.0044.A00.11-02.02-A3- Mon Jan 13 17:31:54 2014

0148.0044.A00.13 Tube square for FTP upper part

Pos	Article nr	Description	Qty
1	0990.A1B5.002.00	Fasteningplate holes 70x30x2	2
2	0700.0010.A05.62	Tube guide	2
3	0990.A1B5.003.00	Fasteningplate holes 70x30x12	2
4	89.0914.015.0002	Lock Nut M10	4
5	0148.0044.A00.12	Tube square for FTP upper part	1

© Meyn Food Processing Technology B.V.

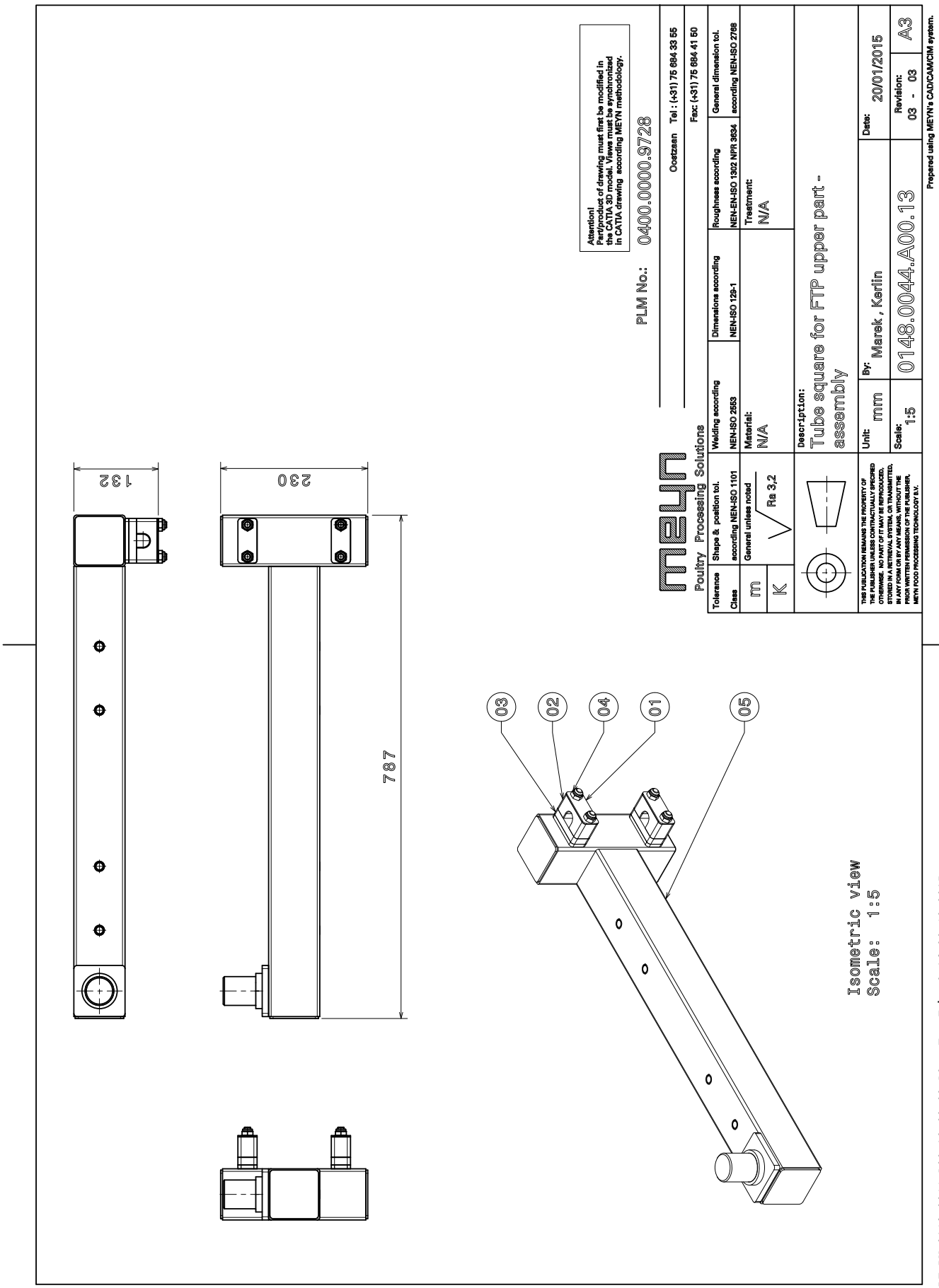
132
230
787
03
02
04
01
05
Isometric view
Scale: 1:5
Attention!
Part/product of drawing must first be modified in the CATIA 3D model. Views must be synchronized in CATIA drawing according MEYN methodology.
PLM No.: 0400.0000.9728
Oostzaan Tel : (+31) 75 684 33 55
Fax: (+31) 75 684 41 50
meyn
Poultry Processing Solutions
Tolerance Class m K
Shape & position tol. according NEN-ISO 1101
General unless noted Ra 3,2
Welding according NEN-ISO 2553
Material: N/A
Dimensions according NEN-ISO 129-1
Roughness according NEN-EN-ISO 1302 NPR 3634
General dimension tol. according NEN-ISO 2768
Treatment: N/A
Description: Tube square for FTP upper part - assembly
Unit: mm
By: Marek, Kerlin
Date: 20/01/2015
Scale: 1:5
0148.0044.A00.13
Revision: 03 - 03
A3
Prepared using MEYN's CAD/CAM/CIM system.
THIS PUBLICATION REMAINS THE PROPERTY OF MEYN FOOD PROCESSING TECHNOLOGY B.V. UNLESS OTHERWISE. NO PART OF IT MAY BE REPRODUCED, STORED IN A RETRIEVAL SYSTEM, OR TRANSMITTED, IN ANY FORM OR BY ANY MEANS, WITHOUT THE PRIOR WRITTEN PERMISSION OF THE PUBLISHER, MEYN FOOD PROCESSING TECHNOLOGY B.V.
-PDF BW-0148.0044.A00.13-03.03-A3- Tue Feb 3 16:39:49 2015

0148.0044.A00.15 Container lock

Pos	Article nr	Description	Qty
1	0700.0010.A01.62	Handle	1
2	0148.0044.A00.14	Container lock	1
3	0990.AB11.A04.00	Tube round 12x1 L=20.5mm	1
4	89.0805.015.0012	Tap Bolt M10 X 35	1
5	89.0914.015.0002	Lock Nut M10	1
6	89.0907.015.0005	Washer Medium M 10	1

© Meyn Food Processing Technology B.V.

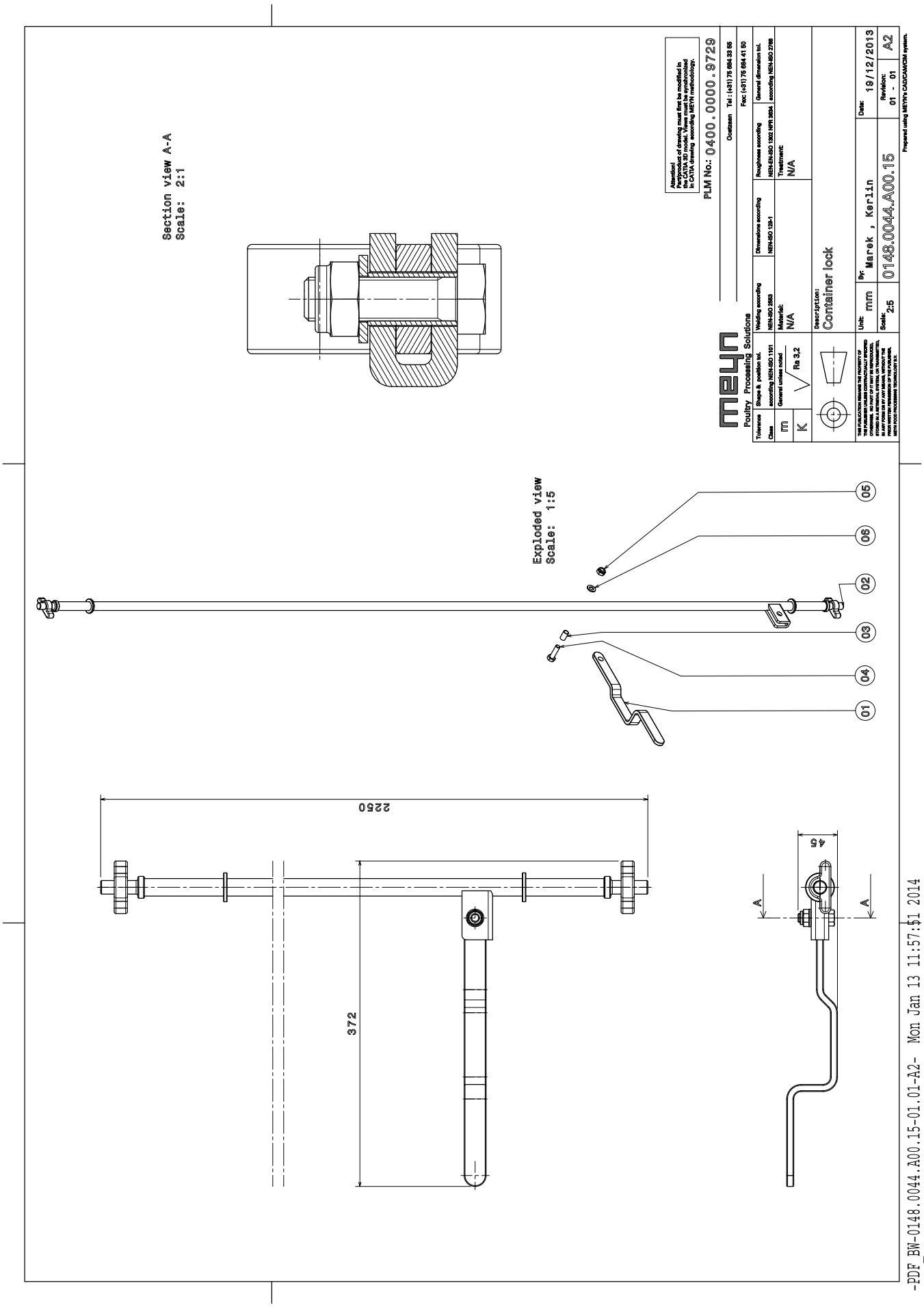
Section view A-A
Scale: 2:1
Exploded view
Scale: 1:5
01
02
03
04
05
06
2250
372
A
A
Attention!
Reproduction of drawing must first be modified in the CATIA 3D model. Views must be synchronized in CATIA drawing according MEYN methodology.
PLM No.: 0400.0000.9729
Oostzaan Tel.: (+31) 75 684 33 55
Fax: (+31) 75 684 41 50
meyn
Poultry Processing Solutions
Tolerance
Class m K
Shape & position tol. according NEN-ISO 1101
General unless noted Ra 3.2
Welding according NEN-ISO 2553
Material: N/A
Dimensions according NEN-ISO 129-1
Roughness according NEN-EN-ISO 1302 NPR 3664
Treatment: N/A
General dimension tol. according NEN-ISO 2768
Description: Container lock
Unit: mm
Scale: 2:5
By: Marek , Kerlin
0148.0044.A00.15
Date: 19/12/2013
Revision: 01 - 01
A2
Prepared using MEYN's CAD/CAM/CIM system.
-PDF_BW-0148.0044.A00.15-01.01-A2- Mon Jan 13 11:57:51 2014

0351.0004.A00.05 TFP guide - main assembly

Pos	Article nr	Description	Qty
1	0351.0004.A00.04	TFP support frame guide - weld	1
2	0351.0004.A00.10	TFP guide assembly	1
3	0351.0004.A00.26	TFP guide assembly	1
4	0990.T071.109.00	BRACKET, CLAMPING/RAPID HQ`	4
5	89.0914.015.0011	Lock Nut M 8	8
6	89.0907.015.0004	Washer Medium M 8	8
7	89.0806.015.0015	Tap Bolt M12 X 25	4
8	0351.0004.A00.20	Suspension bracket for S tube	2

© Meyn Food Processing Technology B.V.

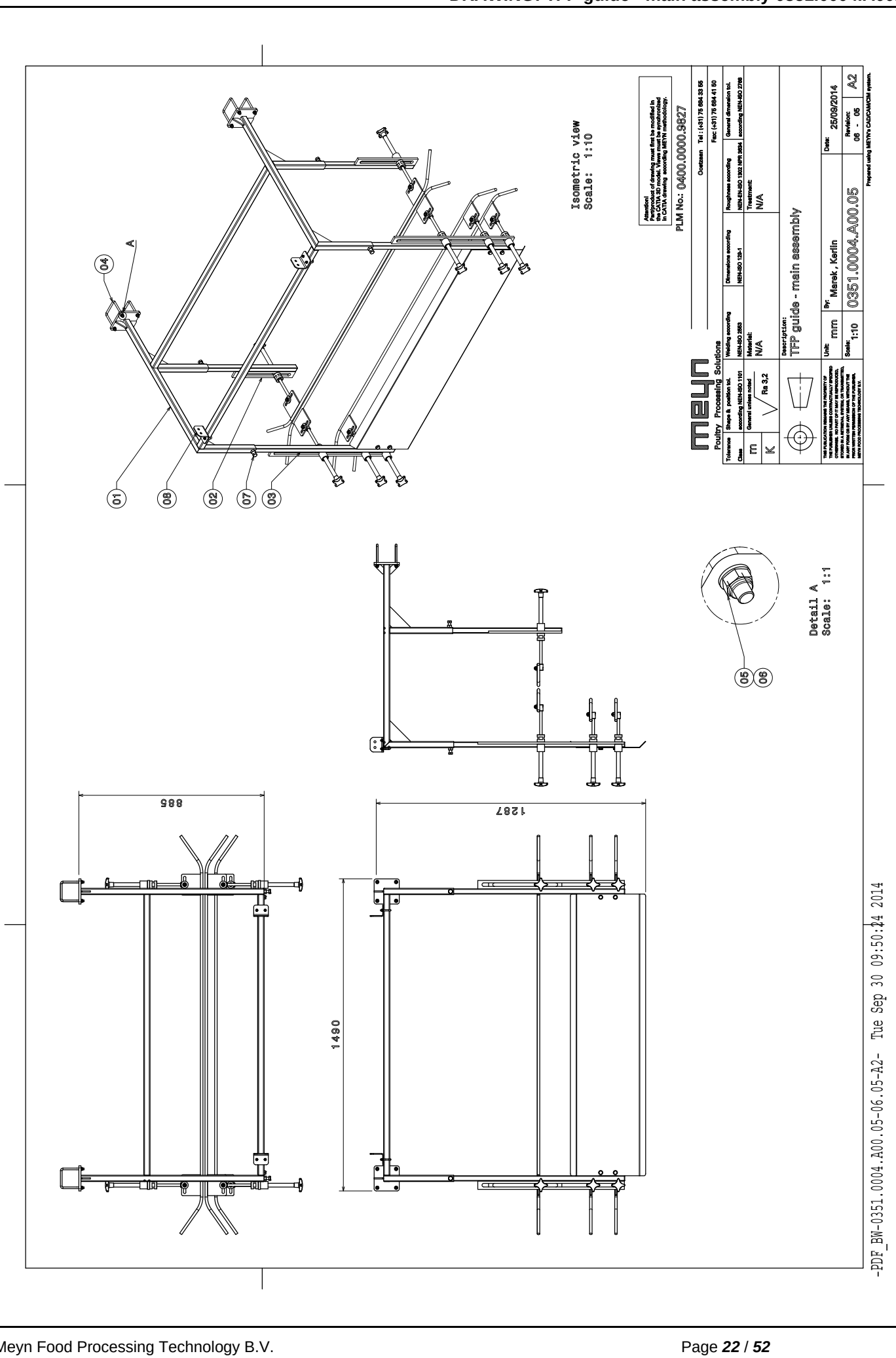
Isometric view
Scale: 1:10
Attention!
Reproduction of drawing must first be modified in the CATIA 3D model. Views must be synchronized in CATIA drawing according MEYN methodology.
PLM No.: 0400.0000.9927
Oostzaan Tel.: (+31) 75 684 33 55
Fax: (+31) 75 684 41 50
Poultry Processing Solutions
Tolerance
Class m K
Shape & position tol. according NEN-ISO 1101
General unless noted Ra 3.2
Welding according NEN-ISO 2553
Material: N/A
Dimensions according NEN-ISO 129-1
Roughness according NEN-EN-ISO 1302 NPR 3664
Treatment: N/A
General dimension tol. according NEN-ISO 2768
Description:
TFP guide - main assembly
Unit: mm
Scale: 1:10
Dr: Marek, Kerlin
0351.0004.A00.05
Date: 25/09/2014
Revision: 06 - 05
A2
Prepared using MEYN's CAD/CAM/CIM system.
Detail A
Scale: 1:1
885
1287
1490
01
08
02
07
03
04
A
05
06
-PDF_BW-0351.0004.A00.05-06.05-A2- Tue Sep 30 09:50:24 2014

0351.0004.A00.10 TFP guide assembly

Pos	Article nr	Description	Qty
1	0351.0004.A00.11	Guide support	1
2	0148.0044.A00.18	Guide adjuster 135xM12	2
3	0351.0004.A00.27	Shackle guide	1
4	0351.0004.A00.12	Guide support	1
5	89.0914.016.0003	Lock Nut M 10	2
6	89.0907.015.0018	Washer M10	2

© Meyn Food Processing Technology B.V.

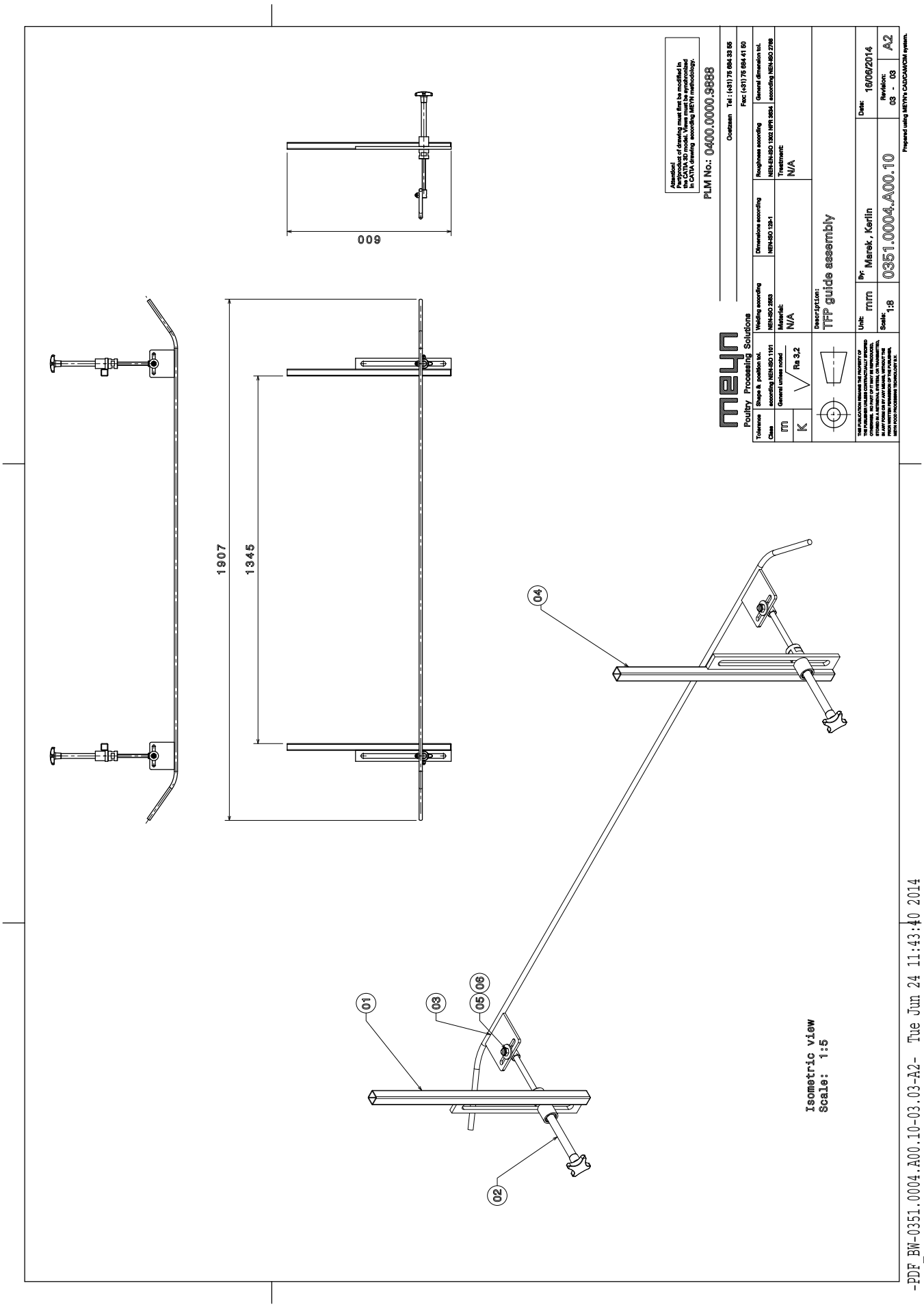
600
1907
1345
01
02
03
04
05
06
Isometric view
Scale: 1:5
Attention!
Reproduction of drawing must first be modified in the CATIA 3D model. Views must be synchronized in CATIA drawing according MEYN methodology.
PLM No.: 0400.0000.9888
Oostzaan Tel.: (+31) 75 684 33 55
Fax: (+31) 75 684 41 50
meyn
Poultry Processing Solutions
Tolerance
Class m K
Shape & position tol. according NEN-ISO 1101
General unless noted Ra 3.2
Welding according NEN-ISO 2553
Material: N/A
Dimensions according NEN-ISO 129-1
Roughness according NEN-EN-ISO 1302 NPR 3664
Treatment: N/A
General dimension tol. according NEN-ISO 2768
Description:
TFP guide assembly
Unit: mm
Scale: 1:8
Pr: Marek, Kerlin
0351.0004.A00.10
Date: 16/06/2014
Revision: 03 - 03
A2
Prepared using MEYN's CAD/CAM/CIM system.
-PDF_BW-0351.0004.A00.10-03.03-A2- Tue Jun 24 11:43:40 2014

0148.0044.A00.18 Guide adjuster 135xM12

Pos	Article nr	Description	Qty
1	0148.0044.A01.18	Threaded bush D28 L=155	2
2	0990.DM00.047.00	Holder	2
3	0148.0044.A00.19	Guide adjuster rod 268xM12	2
4	89.1503.900.0003	Star GRip M12X63	2
5	89.1147.015.0007	Socket Screw M12x40	2
6	89.0910.015.0004	Circlip Housing ?28	2
7	0990.A210.003.00	BUSHING, GUIDANCE, 35/20.SS	2
8	0990.DM00.002.05	Ring 20x12 L=20	2

© Meyn Food Processing Technology B.V.

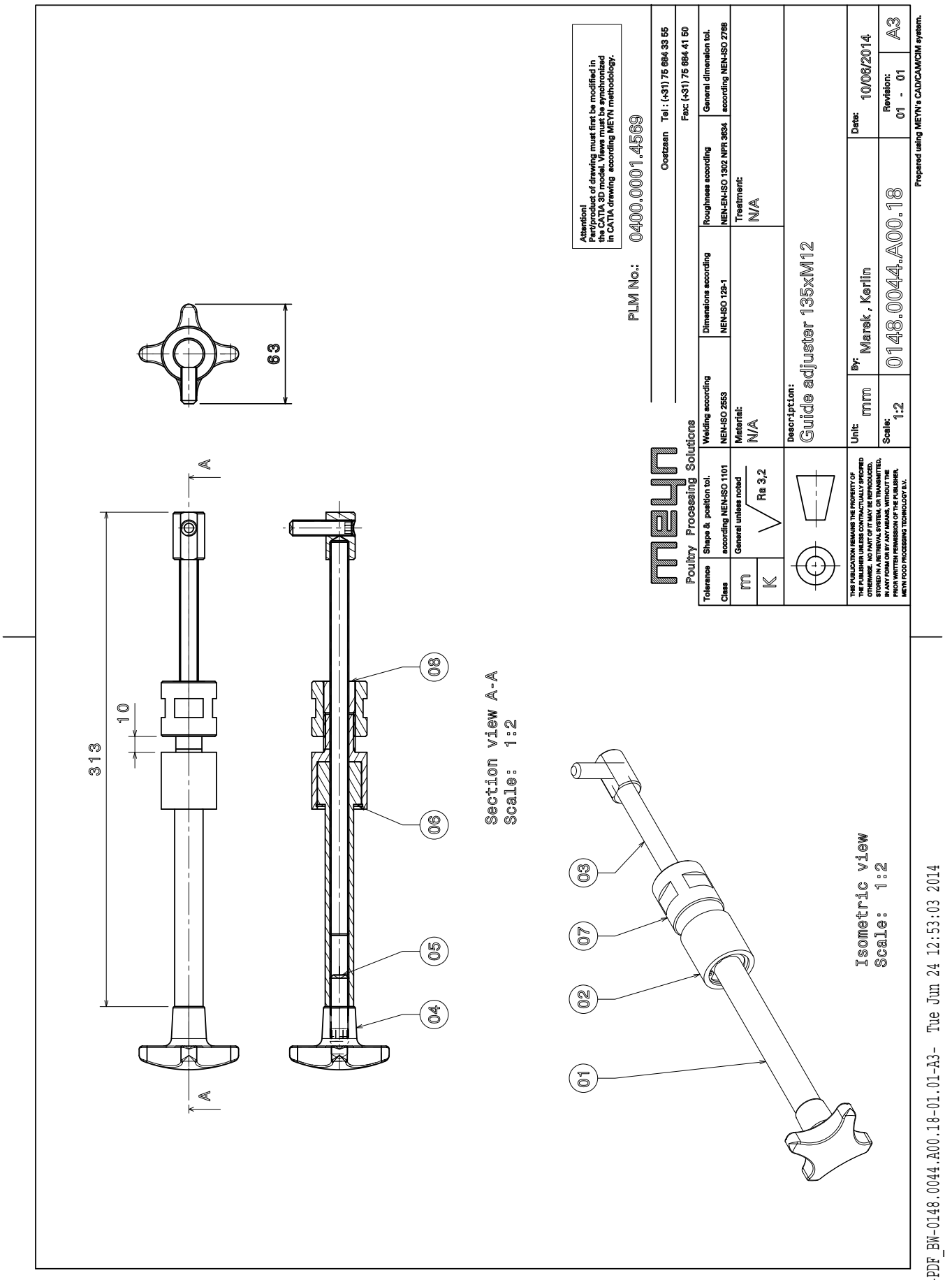
63
A
A
313
10
08
06
05
04
Section view A-A
Scale: 1:2
03
07
02
01
Isometric view
Scale: 1:2
Attention!
Part/product of drawing must first be modified in the CATIA 3D model. Views must be synchronized in CATIA drawing according MEYN methodology.
PLM No.: 0400.0001.4569
Oostzaan Tel : (+31) 75 684 33 55
Fax: (+31) 75 684 41 50
meyn
Poultry Processing Solutions
Tolerance
Class
m
K
Shape & position tol.
according NEN-ISO 1101
General unless noted
Welding according
NEN-ISO 2553
Ra 3,2
Dimensions according
NEN-ISO 129-1
Roughness according
NEN-EN-ISO 1302 NPR 3634
General dimension tol.
according NEN-ISO 2768
Material:
N/A
Treatment:
N/A
Description:
Guide adjuster 135xM12
Unit: mm
By: Marek, Kerlin
Date: 10/06/2014
Scale: 1:2
0148.0044.A00.18
Revision: 01 - 01
A3
Prepared using MEYN's CAD/CAM/CIM system.
THIS PUBLICATION REMAINS THE PROPERTY OF THE PUBLISHER. NO PART OF IT MAY BE REPRODUCED, STORED IN A RETRIEVAL SYSTEM, OR TRANSMITTED, IN ANY FORM OR BY ANY MEANS, WITHOUT THE PRIOR WRITTEN PERMISSION OF THE PUBLISHER, MEYN FOOD PROCESSING TECHNOLOGY B.V.
-PDF BW-0148.0044.A00.18-01.01-A3- Tue Jun 24 12:53:03 2014

0351.0004.A00.26 TFP guide assembly

Pos	Article nr	Description	Qty
1	0351.0004.A00.30	guide support	1
2	0351.0004.A00.29	Guide support	1
3	0148.0044.A00.18	Guide adjuster 135xM12	6
4	0351.0004.A00.28	Product guide	2
5	0351.0004.A00.27	Shackle guide	1
6	0351.0004.A01.26	TFP safety wall	1
7	89.0907.015.0018	Washer M10	6
8	89.0914.016.0003	Lock Nut M 10	6
9	89.0805.015.0021	SCREW HEX HD M10X12	4
10	89.0907.015.0005	Washer Medium M 10	4

© Meyn Food Processing Technology B.V.

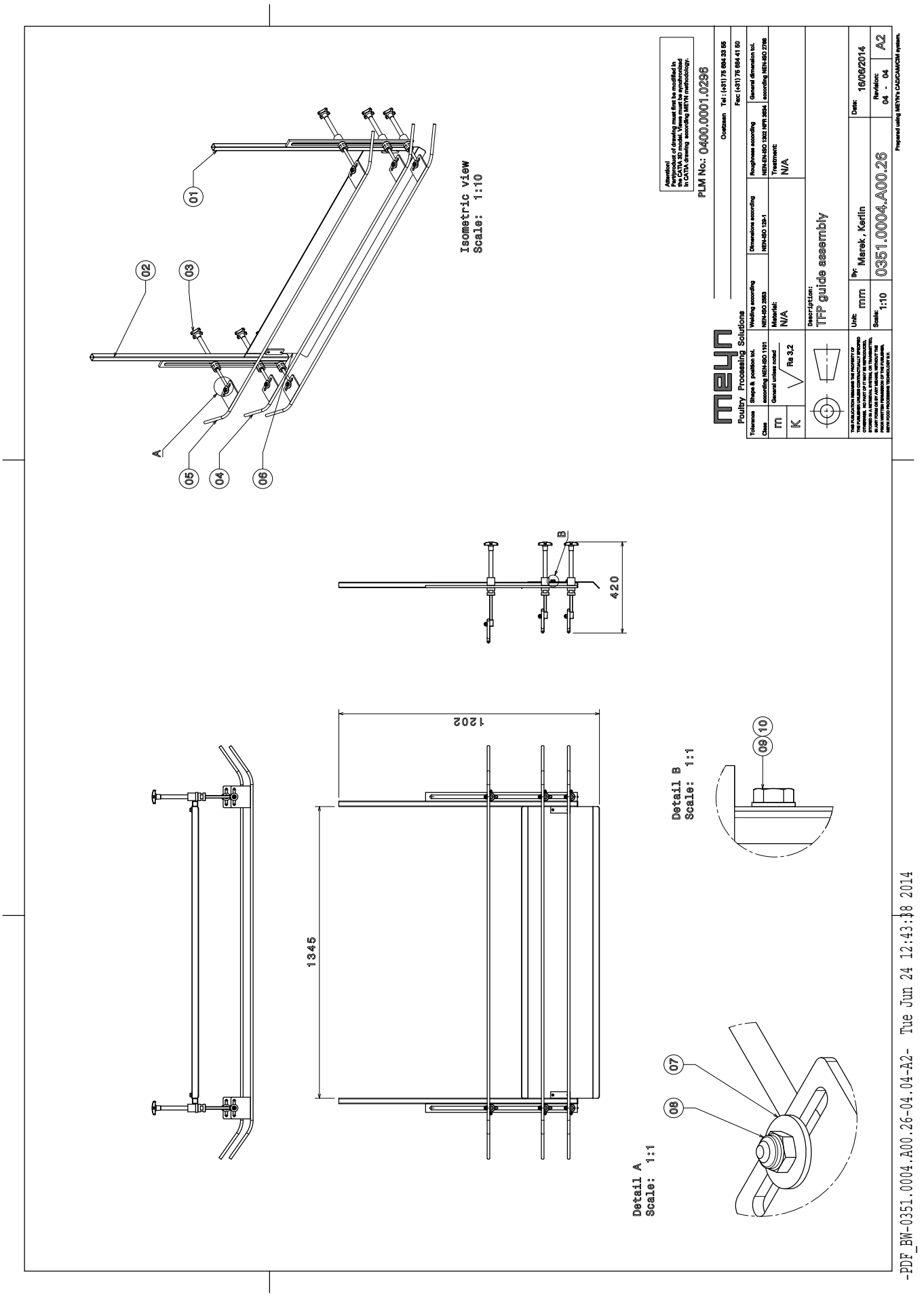
Isometric view
Scale: 1:10
01
02
03
04
05
06
A
B
420
1202
1345
Detail B
Scale: 1:1
09
10
Detail A
Scale: 1:1
07
08
Attention!
Technical product of drawing must first be modified in the CATIA 3D model. Views must be synchronized in CATIA drawing according MEYN methodology.
PLM No.: 0400.0001.0296
Oostzaan Tel.: (+31) 75 684 33 55
Fax: (+31) 75 684 41 50
Poultry Processing Solutions
Tolerance
Class m K
Shape & position tol. according NEN-ISO 1101
General unless noted Ra 3.2
Welding according NEN-ISO 2553
Material: N/A
Dimensions according NEN-ISO 129-1
Roughness according NEN-EN-ISO 1302 NPR 3664
General dimension tol. according NEN-ISO 2768
Treatment: N/A
Description:
TFP guide assembly
Unit: mm
Scale: 1:10
By: Marek, Kerlin
0351.0004.A00.26
Date: 16/06/2014
Revision: 04 - 04
A2
Prepared using MEYN's CAD/CAM/CIM system.
-PDF_BW-0351.0004.A00.26-04.04-A2- Tue Jun 24 12:43:38 2014

0148.0044.A00.18 Guide adjuster 135xM12

Pos	Article nr	Description	Qty
1	0148.0044.A01.18	Threaded bush D28 L=155	6
2	0990.DM00.047.00	Holder	6
3	0148.0044.A00.19	Guide adjuster rod 268xM12	6
4	89.1503.900.0003	Star GRip M12X63	6
5	89.1147.015.0007	Socket Screw M12x40	6
6	89.0910.015.0004	Circlip Housing ?28	6
7	0990.A210.003.00	BUSHING, GUIDANCE, 35/20.SS	6
8	0990.DM00.002.05	Ring 20x12 L=20	6

© Meyn Food Processing Technology B.V.

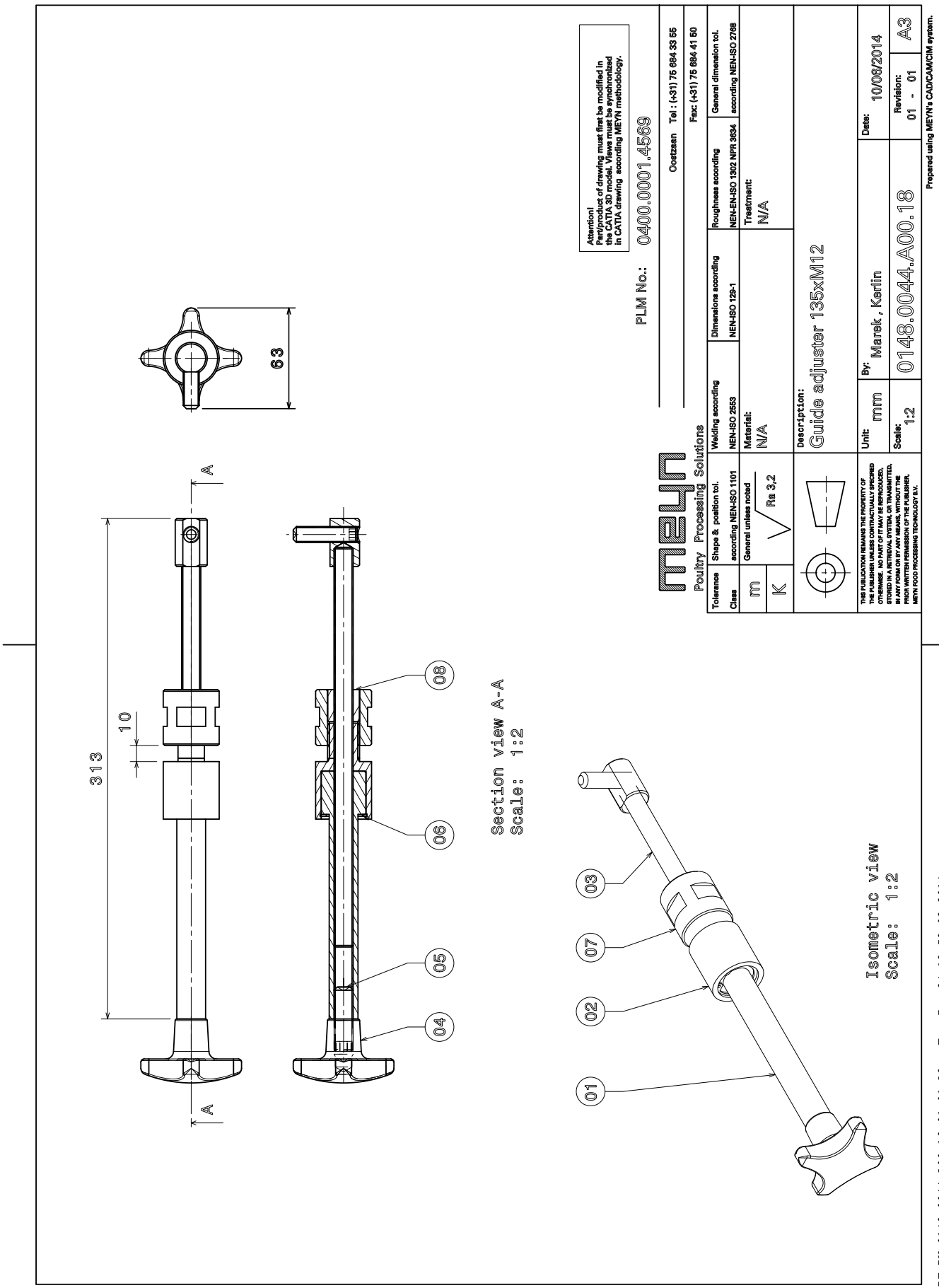
63
A
A
313
10
08
06
05
04
Section view A-A
Scale: 1:2
03
07
02
01
Isometric view
Scale: 1:2
Attention!
Part/product of drawing must first be modified in the CATIA 3D model. Views must be synchronized in CATIA drawing according MEYN methodology.
PLM No.: 0400.0001.4569
Oostzaan Tel : (+31) 75 684 33 55
Fax: (+31) 75 684 41 50
meyn
Poultry Processing Solutions
Tolerance
Class
m
K
Shape & position tol.
according NEN-ISO 1101
General unless noted
Welding according
NEN-ISO 2553
Material:
N/A
Dimensions according
NEN-ISO 129-1
Roughness according
NEN-EN-ISO 1302 NPR 3634
Treatment:
N/A
General dimension tol.
according NEN-ISO 2768
Description:
Guide adjuster 135xM12
Unit: mm
By: Marek, Kerlin
Date: 10/06/2014
Scale: 1:2
0148.0044.A00.18
Revision: 01 - 01
A3
Prepared using MEYN's CAD/CAM/CIM system.
THIS PUBLICATION REMAINS THE PROPERTY OF THE PUBLISHER. UNLESS OTHERWISE STIPULATED OTHERWISE, NO PART OF IT MAY BE REPRODUCED, STORED IN A RETRIEVAL SYSTEM, OR TRANSMITTED, IN ANY FORM OR BY ANY MEANS, WITHOUT THE PRIOR WRITTEN PERMISSION OF THE PUBLISHER, MEYN FOOD PROCESSING TECHNOLOGY B.V.
-PDF BW-0148.0044.A00.18-01.01-A3- Tue Jun 24 12:53:03 2014

0351.0004.A00.20 Suspension bracket for S tube

Pos	Article nr	Description	Qty
1	0351.0004.A02.20	Suspension bracket for clampin	2
2	0351.0004.A01.20	Clamping bracket CTC 40 L=50	2
3	89.0914.015.0010	Lock Nut M 6	4

© Meyn Food Processing Technology B.V.

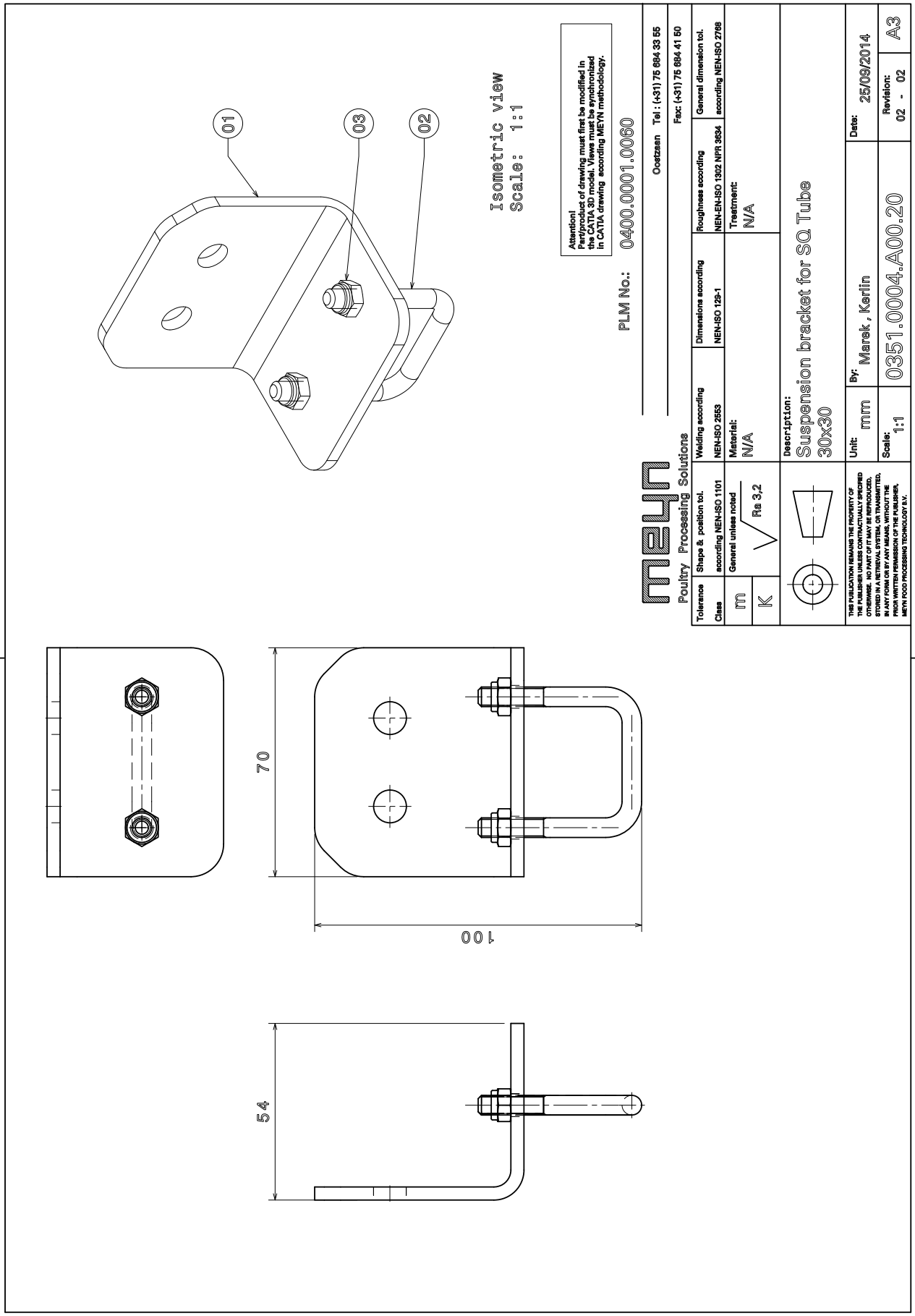
01
03
02
Isometric view
Scale: 1:1
Attention!
Part/product of drawing must first be modified in the CATIA 3D model. Views must be synchronized in CATIA drawing according MEYN methodology.
PLM No.: 0400.0001.0060
Oostzaan Tel.: (+31) 75 684 33 55
Fax: (+31) 75 684 41 50
meyn
Poultry Processing Solutions
Tolerance
Class
m
K
Shape & position tol.
according NEN-ISO 1101
General unless noted
Welding according
NEN-ISO 2553
Material:
N/A
Dimensions according
NEN-ISO 129-1
Roughness according
NEN-EN-ISO 1302 NPR 3634
Treatment:
N/A
General dimension tol.
according NEN-ISO 2768
Description:
Suspension bracket for SO Tube
30x30
THIS PUBLICATION REMAINS THE PROPERTY OF THE PUBLISHER. NO PART OF IT MAY BE REPRODUCED, STORED IN A RETRIEVAL SYSTEM, OR TRANSMITTED, IN ANY FORM OR BY ANY MEANS, WITHOUT THE PRIOR WRITTEN PERMISSION OF THE PUBLISHER, MEYN FOOD PROCESSING TECHNOLOGY B.V.
Unit: mm
Scale: 1:1
By: Marek, Kerlin
0351.0004.A00.20
Date: 25/09/2014
Revision: 02 - 02
A3
Prepared using MEYN's CAD/CAM/CIM system.
70
100
54
-PDF BW-0351.0004.A00.20-02.02-A3- Tue Sep 30 09:46:55 2014

0351.0004.A00.00 TFP role frame - right

Pos	Article nr	Description	Qty
1	0351.0004.A00.01	Mounting base	1
2	89.0627.904.0023	BEARING BLOCK UCFB 206 special	2
3	89.0627.904.0022	BEARING BLOCK UCFB 206 special	2
4	0148.0044.A10.03	TFP upper role	1
5	0148.0044.A10.04	TFP under role	1
6	0990.A504.322.00	SPROCKET, QUILL PICKER/T18/D35	1
7	0351.0002.008.01	distance bush	2
8	0351.DB10.001.40	Fill bush	1
9	0990.A704.062.00	Ring 50x11 L=5	3
10	0351.0004.A01.00	Chain wheel duplex 1/2" z18	1
11	89.0805.015.0001	Tap Bolt M10 X 20	3
12	89.0806.015.0008	SCREW, M12x70/SS/	2
13	89.0901.015.0004	Nut M 12	6
14	89.0866.015.0011	SCREW, M12X50	4
15	89.0907.015.0006	Washer Medium M 12 Low	4
16	0351.0004.A02.00	Gearwheel m3 Z30	2
17	0351.0004.A03.00	Distance sleeve	2
18	0351.0002.011.08	Wing cose cone	6
19	89.1103.015.0003	Socket Head Screw ch M5x8	12
20	0351.0004.A00.02	TFP nose cone lead in	2
21	89.1305.015.0012	Sunk Key 8X7X25	2
22	89.1305.015.0009	Sunk key 8x7x60	1
23	89.0805.015.0023	SCREW HEX HD M10X100	2
24	89.0907.015.0005	Washer Medium M 10	2
25	89.0805.015.0003	Tap Bolt M10 X 30	11
26	89.0914.015.0002	Lock Nut M10	12
27	89.2925.069.0007	Chain 1/2"" Duplex	1
28	0351.0004.A00.09	Spray pipe - assy	1
29	0148.0044.A00.17	Feather collector weld assy	1
30	0351.0004.A00.14	Bottom motor plate	1
31	0351.0004.A00.15	Motor casing	1
32	0351.0004.A05.00	Rod rail L=677.5	1
33	0351.0004.A11.00	Bumper	1
34	89.1103.015.0009	Socket Head Screw ch M5x16	3
35	0351.0004.A00.21	Chain casing - welding assy	1
36	0351.0004.A00.23	Guide support - welding assy	1
37	89.0914.016.0003	Lock Nut M 10	1
38	89.0805.015.0014	Tap Bolt M10 X 25	1

© Meyn Food Processing Technology B.V.

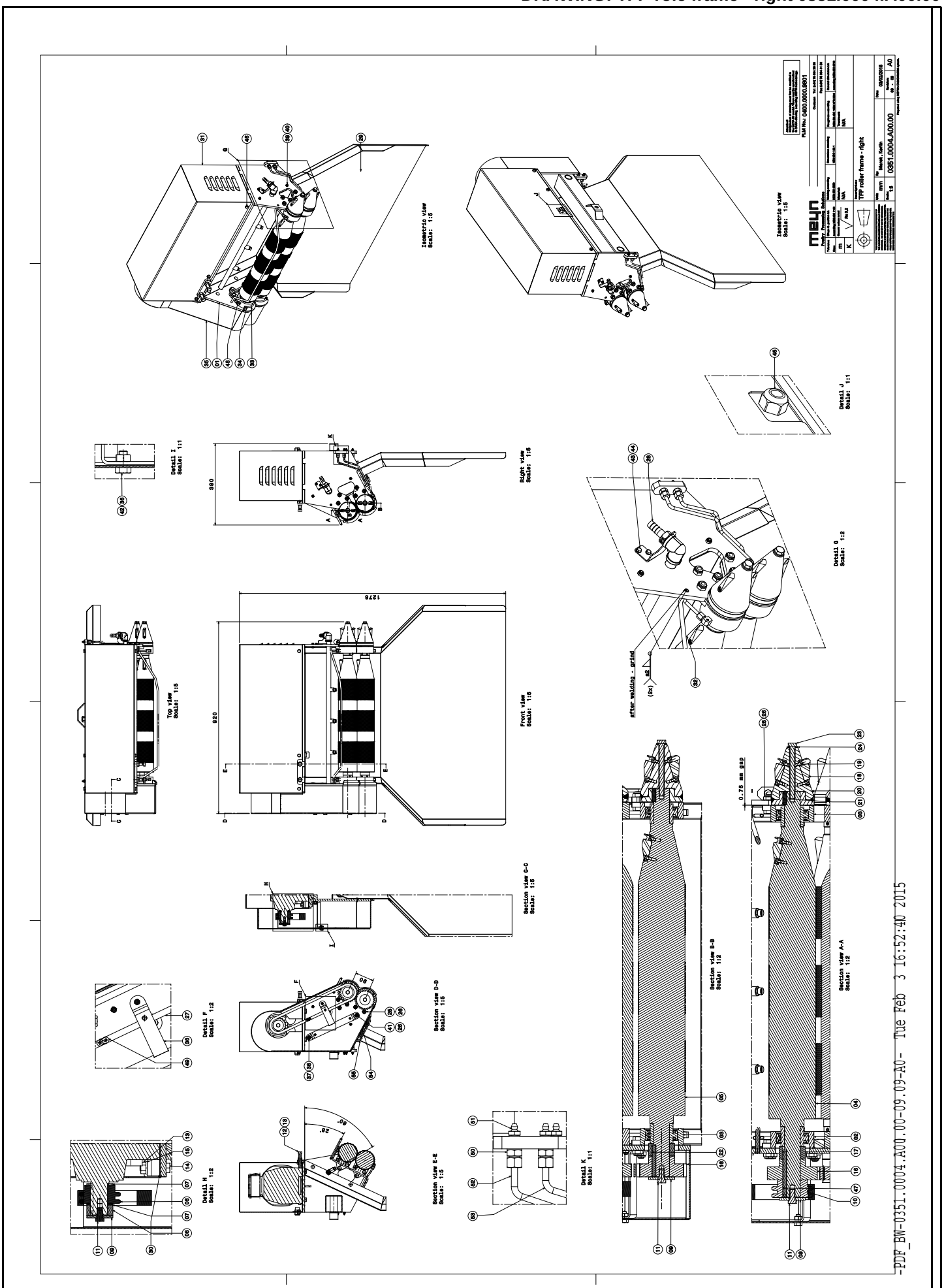
Isometric view
Scale: 1:5
Isometric view
Scale: 1:5
Detail I
Scale: 1:1
Right view
Scale: 1:5
Detail J
Scale: 1:1
Top view
Scale: 1:5
Front view
Scale: 1:5
Detail G
Scale: 1:2
after welding _ grind
Section view C-C
Scale: 1:5
Section view B-B
Scale: 1:2
0.76 mm gap
Section view A-A
Scale: 1:2
Detail F
Scale: 1:2
Section view D-D
Scale: 1:5
Section view E-E
Scale: 1:5
Detail H
Scale: 1:2
Detail K
Scale: 1:1
meyn
TFP roller frame - right
0351.0004.A00.00
A0
-PDF_BW-0351.0004.A00.00-09.09-A0- Tue Feb 3 16:52:40 2015

0351.0004.A00.00 TFP role frame - right

Pos	Article nr	Description	Qty
39	89.0823.015.0004	Carriage bolt M6x20	5
40	89.0914.015.0010	Lock Nut M 6	5
41	89.0805.015.0012	Tap Bolt M10 X 35	1
42	89.0804.015.0001	Tap Bolt M 8 X 16	3
43	89.0907.015.0041	WASHER, FLAT/M5	2
44	89.0802.015.0011	Tap bolt M5 x 12 S.S.	2
45	89.4210.904.0013	Union Hsk-K M20X1,5 GRey	1
46	89.0804.015.0016	Tap Bolt M 8 X 12	6
47	89.1305.015.0024	Sunk Key 8X7X90	1
48	89.2234.011.0006	Coupling	4
49	89.2928.069.0007	End link	1
50	89.2216.011.0014	Coupling	4
51	89.2360.015.0001	GRease Nipple G 1/8"" Hr	4
52	0351.0004.A07.00	Grease pipe - lower right	1
53	0351.0004.A08.00	Grease pipe - upper right	1
54	0351.0004.A09.00	Grease pipe - lower left	1
55	0351.0004.A10.00	Grease pipe - upper left	1

© Meyn Food Processing Technology B.V.

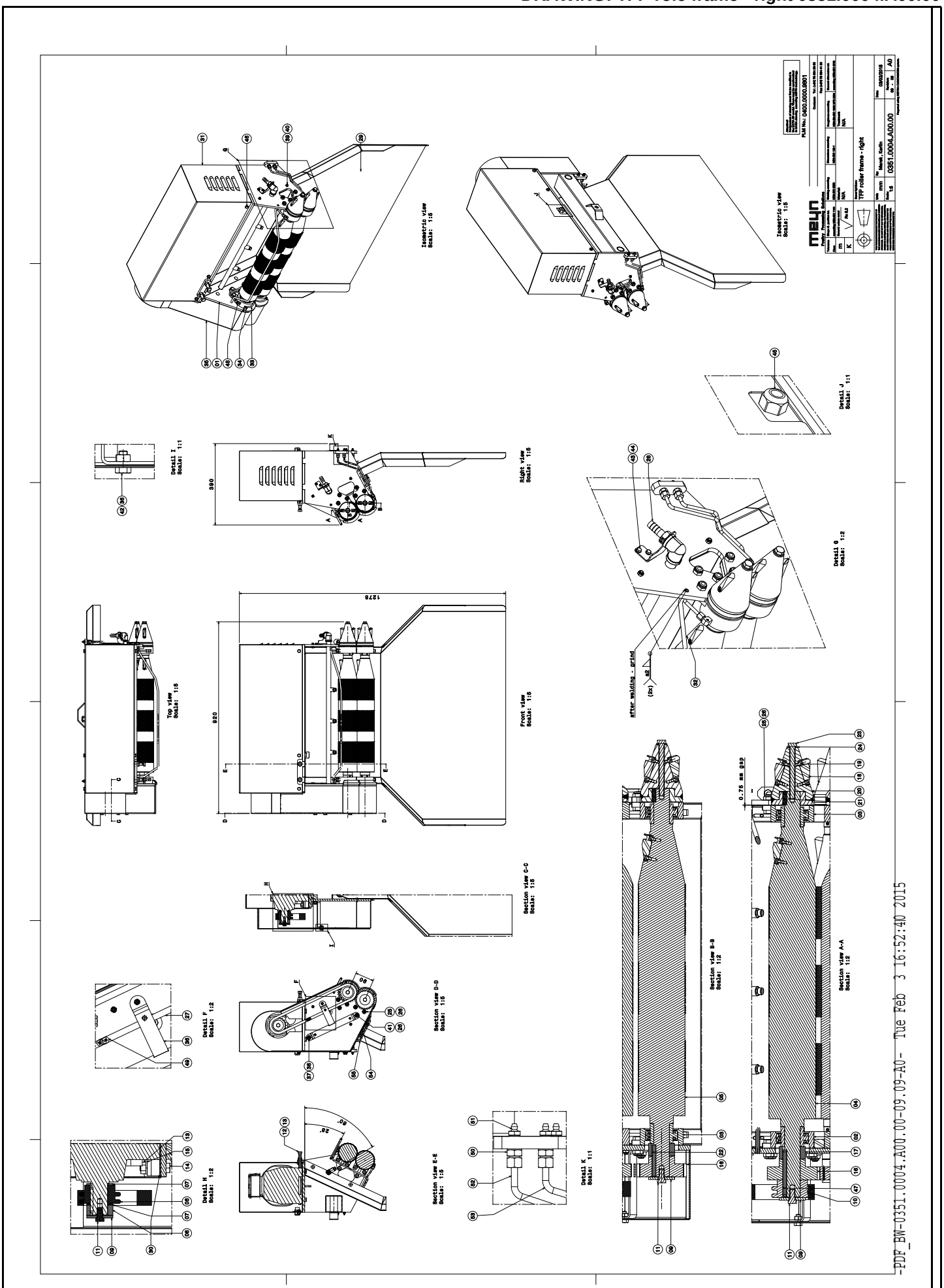
Isometric view
Scale: 1:5
Isometric view
Scale: 1:5
Detail I
Scale: 1:1
Right view
Scale: 1:5
Detail J
Scale: 1:1
Top view
Scale: 1:5
Front view
Scale: 1:5
Detail G
Scale: 1:2
after welding _ grind
Section view C-C
Scale: 1:5
Section view B-B
Scale: 1:2
0.76 mm gap
Section view A-A
Scale: 1:2
Detail F
Scale: 1:2
Section view D-D
Scale: 1:5
Section view E-E
Scale: 1:5
Detail H
Scale: 1:2
Detail K
Scale: 1:1
meyn
TFP roller frame - right
0351.0004.A00.00
-PDF_BW-0351.0004.A00.00-09.09-A0- Tue Feb 3 16:52:40 2015

0351.0004.A00.09 Spray pipe - assy

Pos	Article nr	Description	Qty
1	0351.0004.A00.08	Spray pipe - Welding assy	1
2	89.2308.011.0002	Knee 1/2""	1
3	89.0907.015.0018	Washer M10	1
4	89.0901.015.0007	Nut M 10	1
5	0351.0004.006.01	Handle 1/2"	1
6	89.2435.011.0012	Nozzle 1/4"" -90 degrees	3
7	89.2387.012.0012	COUPLING, HOSE/1/2"X13/STUNNER	1

© Meyn Food Processing Technology B.V.

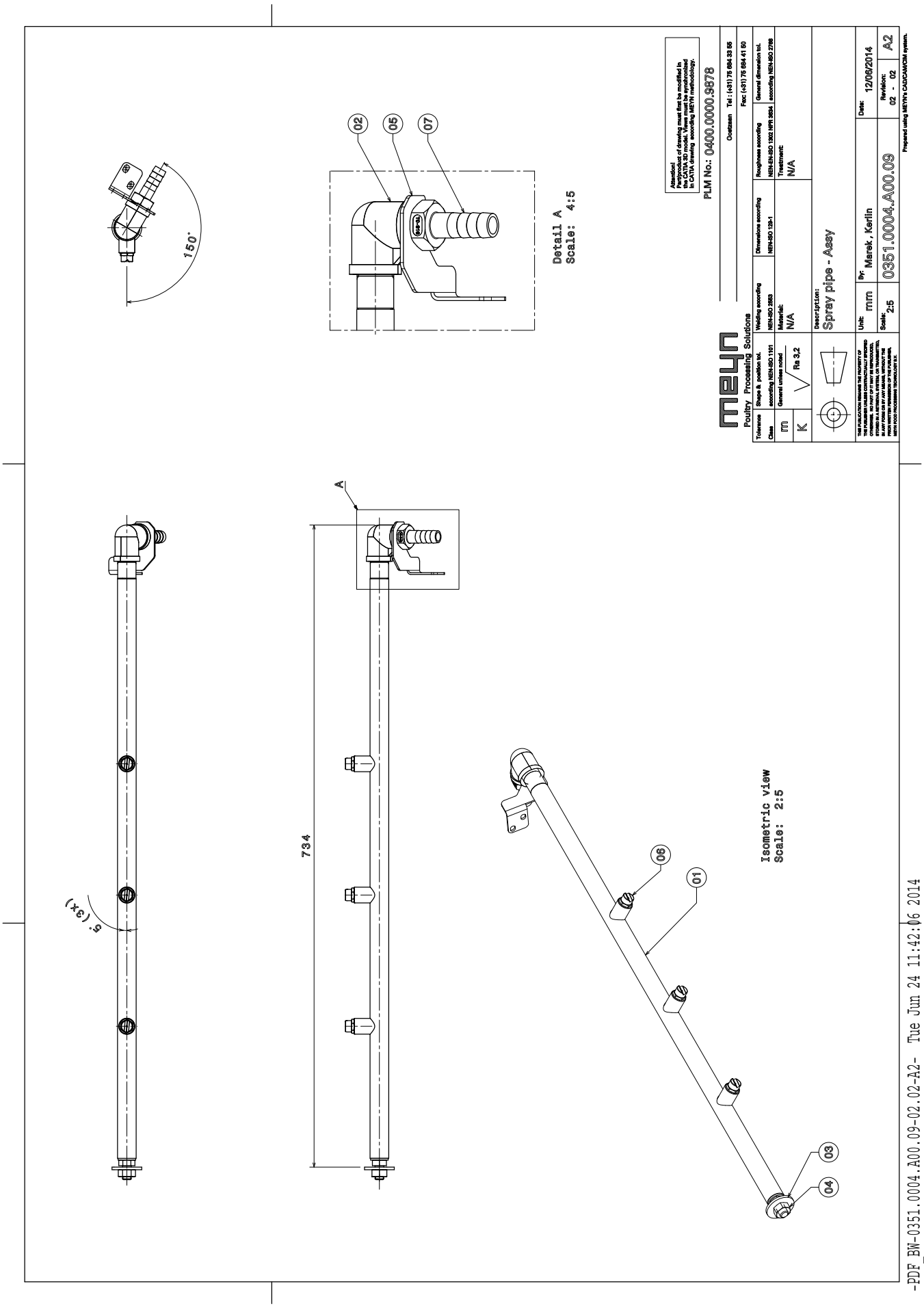
150°
02
05
07
Detail A
Scale: 4:5
Attention!
Technical product of drawing must first be modified in the CATIA 3D model. Views must be synchronized in CATIA drawing according MEYN methodology.
PLM No.: 0400.0000.9878
meyn
Poultry Processing Solutions
Oostzaan Tel.: (+31) 75 684 33 55
Fax: (+31) 75 684 41 50
Tolerance
Class m
Shape & position tol. according NEN-ISO 1101
General unless noted Ra 3.2
Welding according NEN-ISO 2553
Material: N/A
Dimensions according NEN-ISO 129-1
Roughness according NEN-ISO 1302 NPR 3664
Treatment: N/A
General dimension tol. according NEN-ISO 2768
Description:
Spray pipe - Assy
Unit: mm
Scale: 2:5
Pr: Marek, Kerlin
0351.0004.A00.09
Date: 12/06/2014
Revision: 02 - 02
A2
Prepared using MEYN's CAD/CAM/CIM system.
5° (3x)
734
A
Isometric view
Scale: 2:5
06
01
03
04
-PDF_BW-0351.0004.A00.09-02.02-A2- Tue Jun 24 11:42:06 2014

0990.T002.000.07 Suspension Bracket

Pos	Article nr	Description	Qty
1	0990.T002.000.06	suspension bracket	2
2	89.0914.015.0002	Lock Nut M10	4
3	0990.T071.006.00	Clamping bracket	2

© Meyn Food Processing Technology B.V.

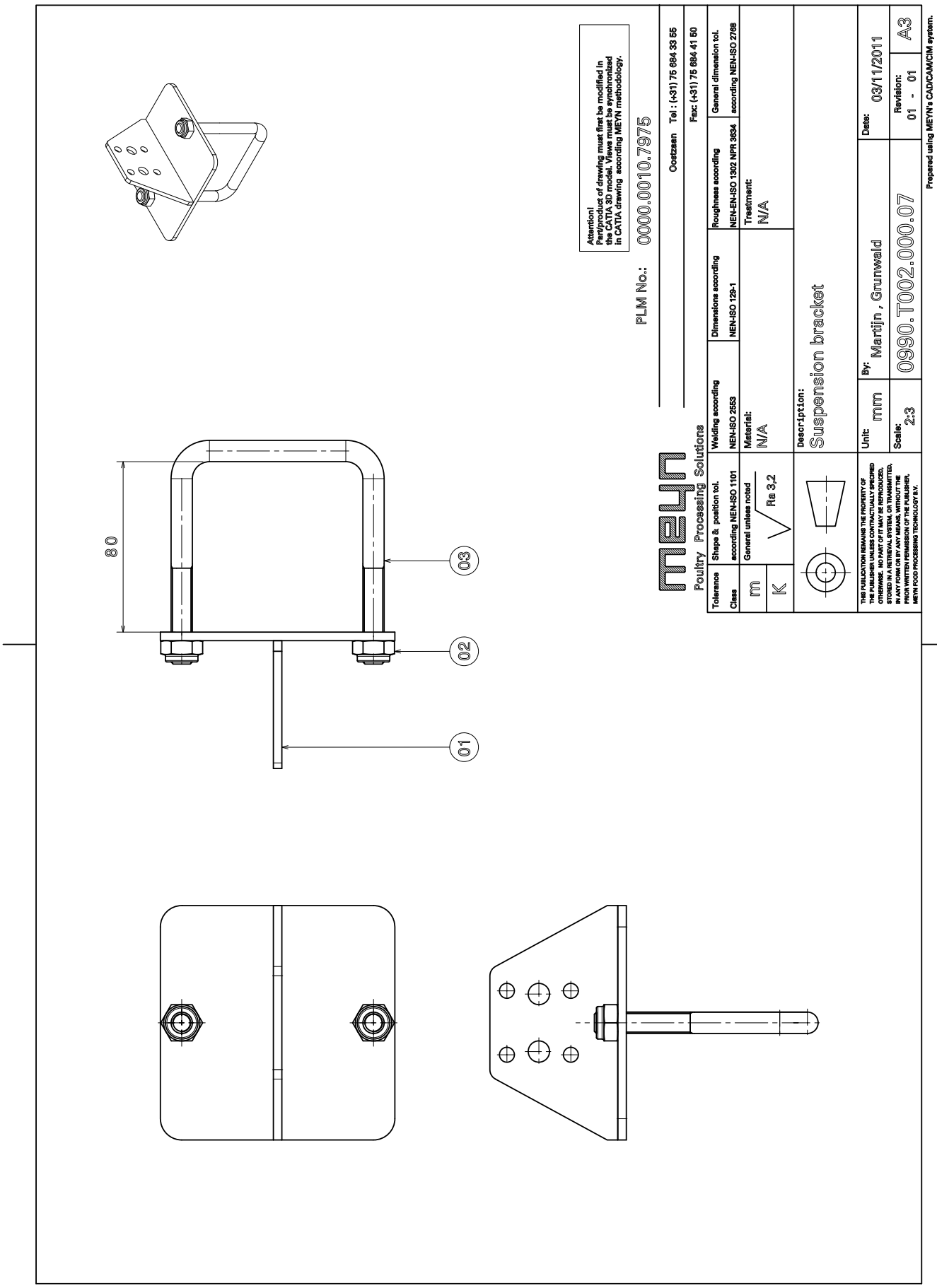
80
03
02
01
Attention!
Part/product of drawing must first be modified in the CATIA 3D model. Views must be synchronized in CATIA drawing according MEYN methodology.
PLM No.: 0000.0010.7975
Oostzaan Tel : (+31) 75 684 33 55
Fax: (+31) 75 684 41 50
meyn
Poultry Processing Solutions
Tolerance
Class
m
K
Shape & position tol.
according NEN-ISO 1101
General unless noted
Welding according
NEN-ISO 2553
Material:
N/A
Dimensions according
NEN-ISO 129-1
Roughness according
NEN-EN-ISO 1302 NPR 3634
Treatment:
N/A
General dimension tol.
according NEN-ISO 2768
Description:
Suspension bracket
Unit:
mm
By:
Martijn , Grunwald
Date:
03/11/2011
Scale:
2:3
0990.T002.000.07
Revision:
01 - 01
A3
Prepared using MEYN's CAD/CAM/CIM system.
-PDF BW-0990.T002.000.07-01.01-A3- Tue Jan 24 13:35:49 2012

0351.0004.A00.25 Suspension bracket

Pos	Article nr	Description	Qty
1	0351.0004.A01.25	Suspension bracket -grundplate	2
2	0990.T071.006.00	Clamping bracket	2
3	89.0914.015.0002	Lock Nut M10	4

© Meyn Food Processing Technology B.V.

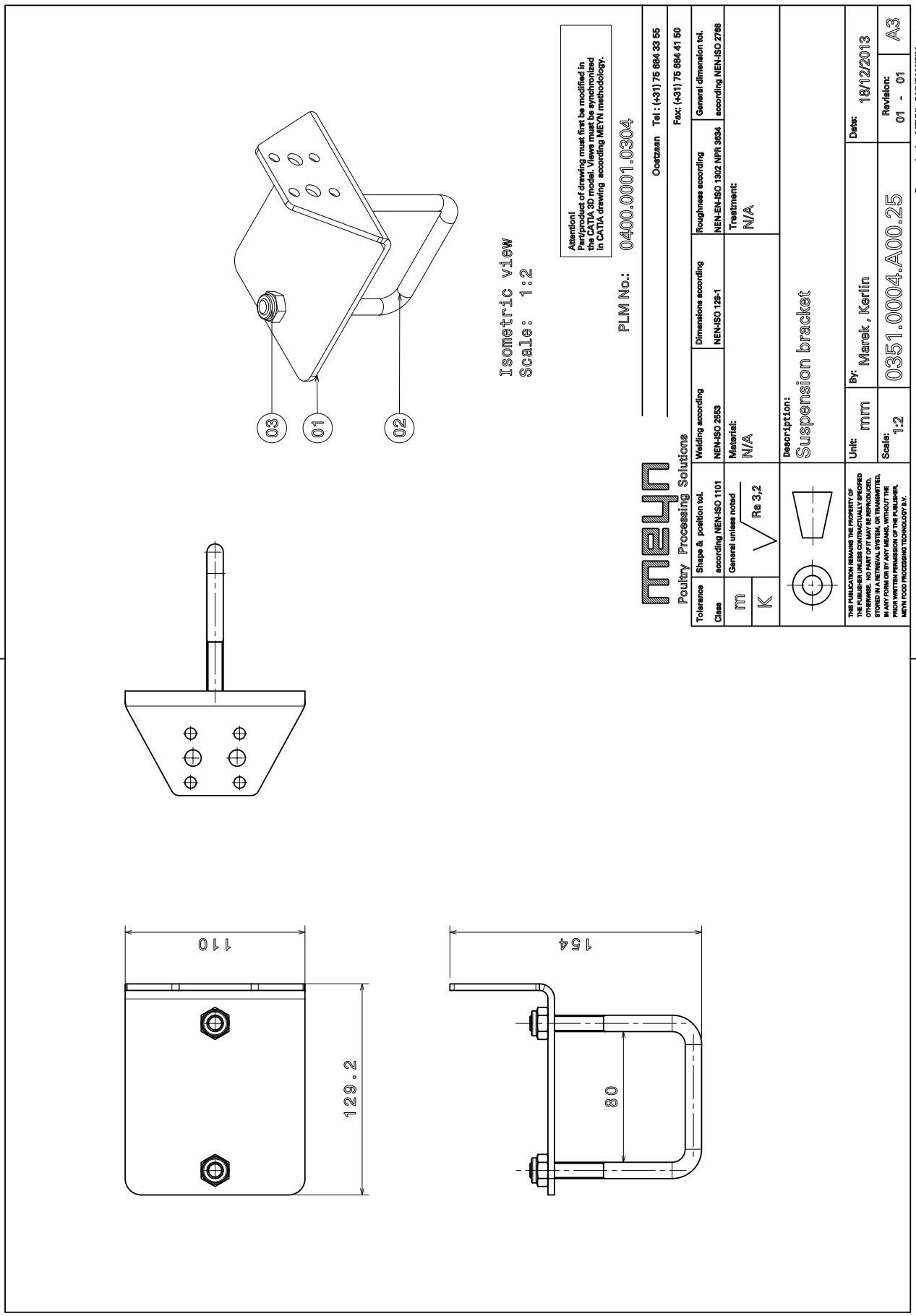
03
01
02
Isometric view
Scale: 1:2
Attention!
Part/product of drawing must first be modified in the CATIA 3D model. Views must be synchronized in CATIA drawing according MEYN methodology.
PLM No.: 0400.0001.0304
Oostzaan Tel : (+31) 75 684 33 55
Fax: (+31) 75 684 41 50
meyn
Poultry Processing Solutions
Tolerance
Class
m
K
Shape & position tol.
according NEN-ISO 1101
General unless noted
Welding according
NEN-ISO 2553
Material:
N/A
Dimensions according
NEN-ISO 129-1
Roughness according
NEN-EN-ISO 1302 NPR 3634
Treatment:
N/A
General dimension tol.
according NEN-ISO 2768
Description:
Suspension bracket
Unit: mm
Scale: 1:2
By: Marek, Kerlin
Date: 18/12/2013
0351.0004.A00.25
Revision: 01 - 01
A3
Prepared using MEYN's CAD/CAM/CIM system.
110
129.2
154
80
-PDF BW-0351.0004.A00.25-01.01-A3- Mon Jan 13 15:20:17 2014

0351.0004.A00.17 Installation bracket

Pos	Article nr	Description	Qty
1	0351.0004.A00.16	Installation bracket	2
2	0990.T071.109.00	BRACKET, CLAMPING/RAPID HQ`	4
3	89.0907.015.0004	Washer Medium M 8	8
4	89.0914.015.0011	Lock Nut M 8	8

© Meyn Food Processing Technology B.V.

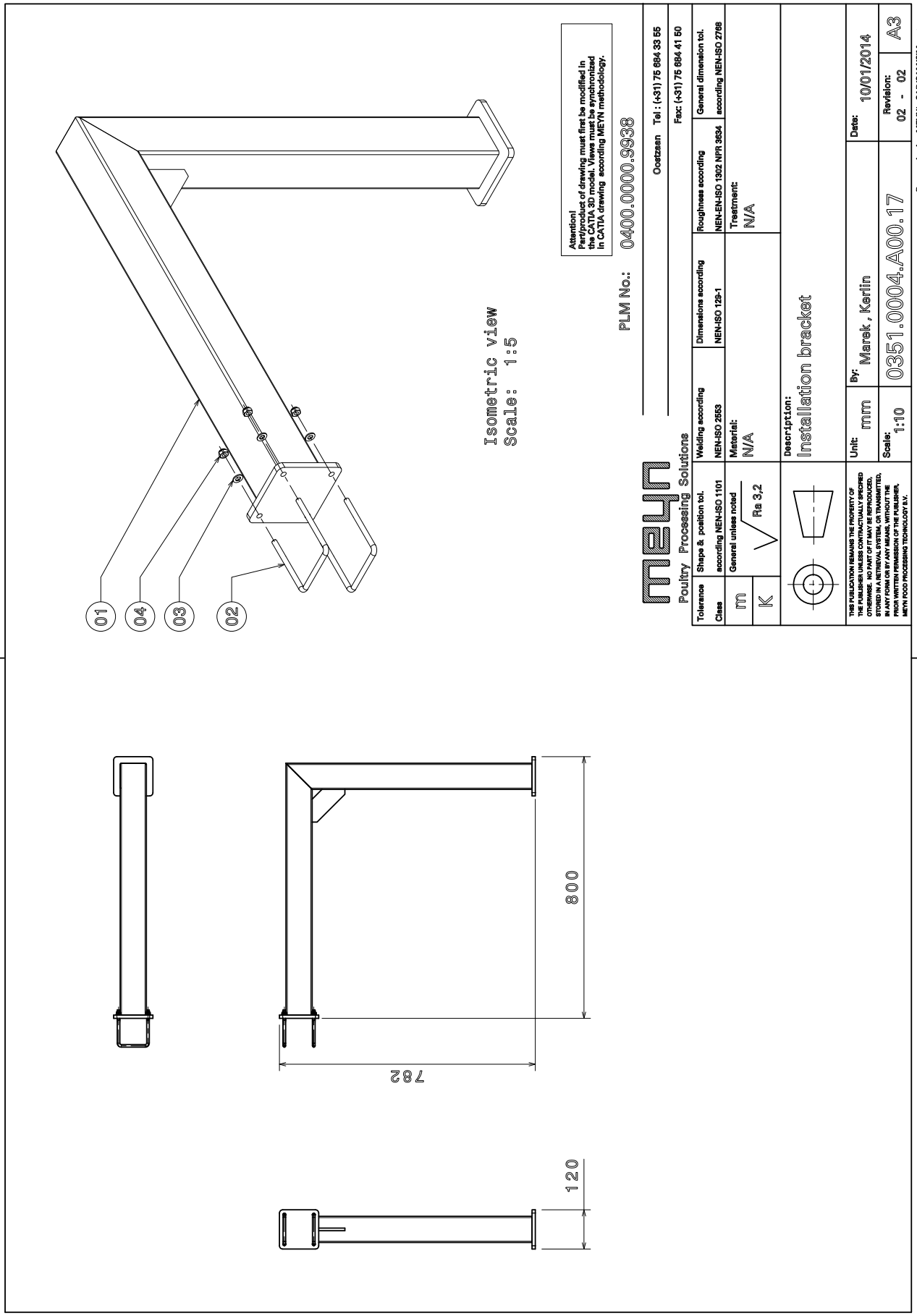
01
04
03
02
Isometric view
Scale: 1:5
Attention!
Part/product of drawing must first be modified in the CATIA 3D model. Views must be synchronized in CATIA drawing according MEYN methodology.
PLM No.: 0400.0000.9938
Oostzaan Tel : (+31) 75 684 33 55
Fax: (+31) 75 684 41 50
meyn
Poultry Processing Solutions
Tolerance
Class
m
K
Shape & position tol.
according NEN-ISO 1101
General unless noted
Welding according
NEN-ISO 2553
Material:
N/A
Ra 3,2
Dimensions according
NEN-ISO 129-1
Roughness according
NEN-EN-ISO 1302 NPR 3634
Treatment:
N/A
General dimension tol.
according NEN-ISO 2768
Description:
Installation bracket
THIS PUBLICATION REMAINS THE PROPERTY OF THE P. MEYN N.V. AND CONTAINS LEGALLY PROTECTED OTHERWISE. NO PART OF IT MAY BE REPRODUCED, STORED IN A RETRIEVAL SYSTEM, OR TRANSMITTED, IN ANY FORM OR BY ANY MEANS, WITHOUT THE PRIOR WRITTEN PERMISSION OF THE PUBLISHER, MEYN FOOD PROCESSING TECHNOLOGY B.V.
Unit: mm
By: Marek, Kerlin
Date: 10/01/2014
Scale: 1:10
0351.0004.A00.17
Revision: 02 - 02
A3
Prepared using MEYN's CAD/CAM/CIM system.
800
782
120
-PDF_BW-0351.0004.A00.17-02.02-A3- Mon Jan 13 14:02:37 2014

0351.0004.A00.19 Slings element - assy

Pos	Article nr	Description	Qty
1	0351.0004.A00.18	Slings element	2
2	0351.0004.A01.19	Ring 42x13 L=5	2
3	0990.A703.007.00	Ring 50X13 L=5	2
4	89.0806.015.0015	Tap Bolt M12 X 25	4

© Meyn Food Processing Technology B.V.

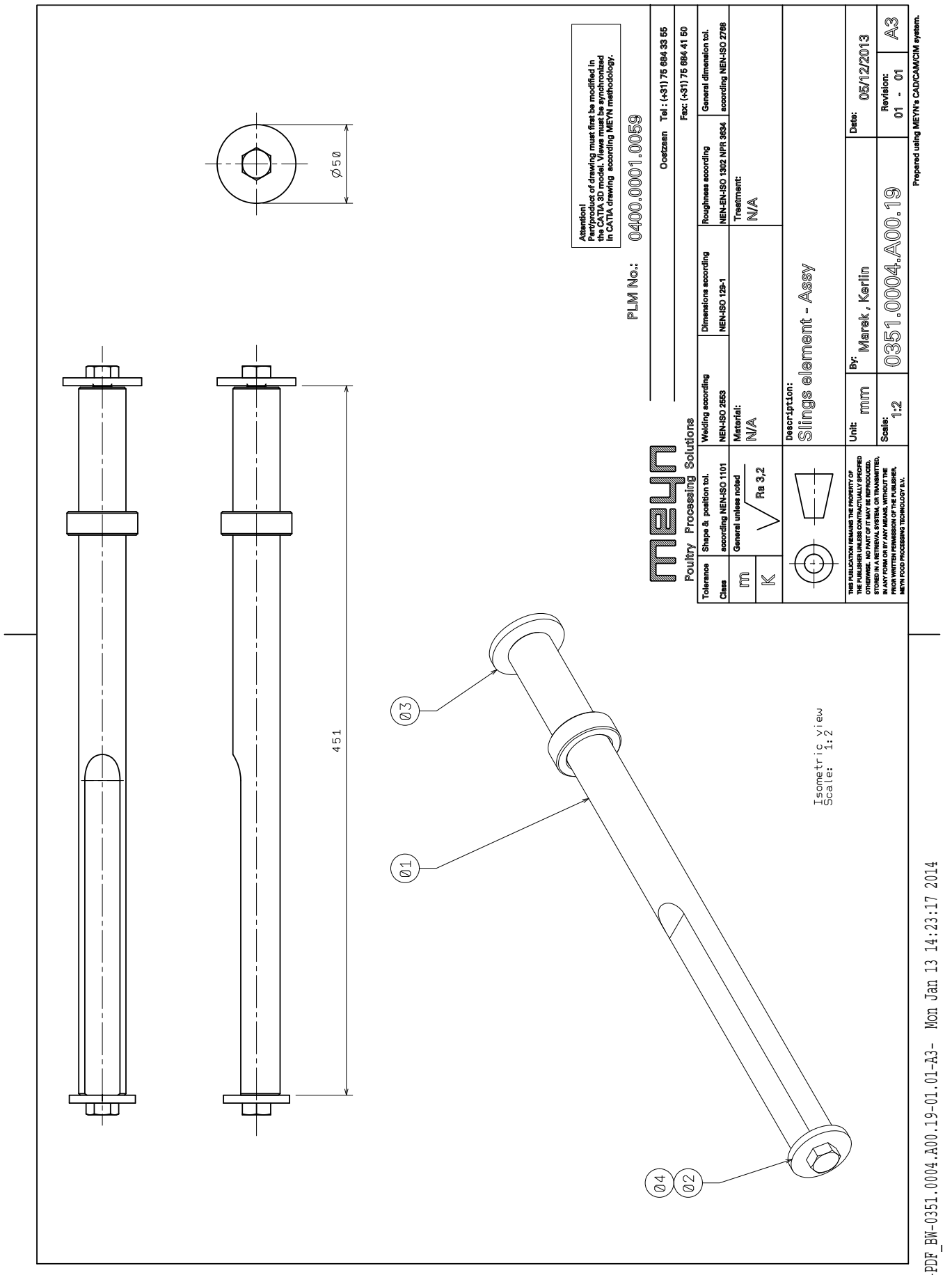
Ø50
451
Ø3
Ø1
Ø4
Ø2
Isometric view
Scale: 1:2
Attention!
Part/product of drawing must first be modified in the CATIA 3D model. Views must be synchronized in CATIA drawing according MEYN methodology.
PLM No.: 0400.0001.0059
Oostzaan Tel : (+31) 75 684 33 55
Fax: (+31) 75 684 41 50
meyn
Poultry Processing Solutions
Tolerance
Class m K
Shape & position tol.
according NEN-ISO 1101
General unless noted
Welding according
NEN-ISO 2553
Material:
N/A
Dimensions according
NEN-ISO 129-1
Roughness according
NEN-EN-ISO 1302 NPR 3634
Ra 3,2
Treatment:
N/A
General dimension tol.
according NEN-ISO 2768
Description:
Slings element - Assy
Unit: mm
Scale: 1:2
By: Marek, Kerlin
0351.0004.A00.19
Date: 05/12/2013
Revision: 01 - 01
A3
THIS PUBLICATION REMAINS THE PROPERTY OF THE PUBLISHER. UNLESS CONTRACTUALLY AGREED OTHERWISE, NO PART OF IT MAY BE REPRODUCED, STORED IN A RETRIEVAL SYSTEM, OR TRANSMITTED, IN ANY FORM OR BY ANY MEANS, WITHOUT THE PRIOR WRITTEN PERMISSION OF THE PUBLISHER, MEYN FOOD PROCESSING TECHNOLOGY B.V.
Prepared using MEYN's CAD/CAM/CIM system.
-PDF_BW-0351.0004.A00.19-01.01-A3- Mon Jan 13 14:23:17 2014

0148.0044.A00.21 Mounting bracket sensor set

Pos	Article nr	Description	Qty
1	0148.0044.A01.21	Sensor fastening plate	1
2	0990.T071.109.00	BRACKET, CLAMPING/RAPID HQ`	2
3	89.0907.015.0004	Washer Medium M 8	4
4	89.0914.015.0011	Lock Nut M 8	4
5	89.4603.904.0027	PILZ PSEN ma1.4a-51	1
6	0148.0044.A02.21	Sensor fastening plate - lower	1
7	89.0914.015.0008	LOCK NUT, M8	4
8	89.0907.015.0011	WASHER, M4/MEDIUM	4
9	89.1102.015.0006	SCREW HEX SCKT HD CAP M4X25	2
10	89.1102.015.0003	Bolt	2

© Meyn Food Processing Technology B.V.

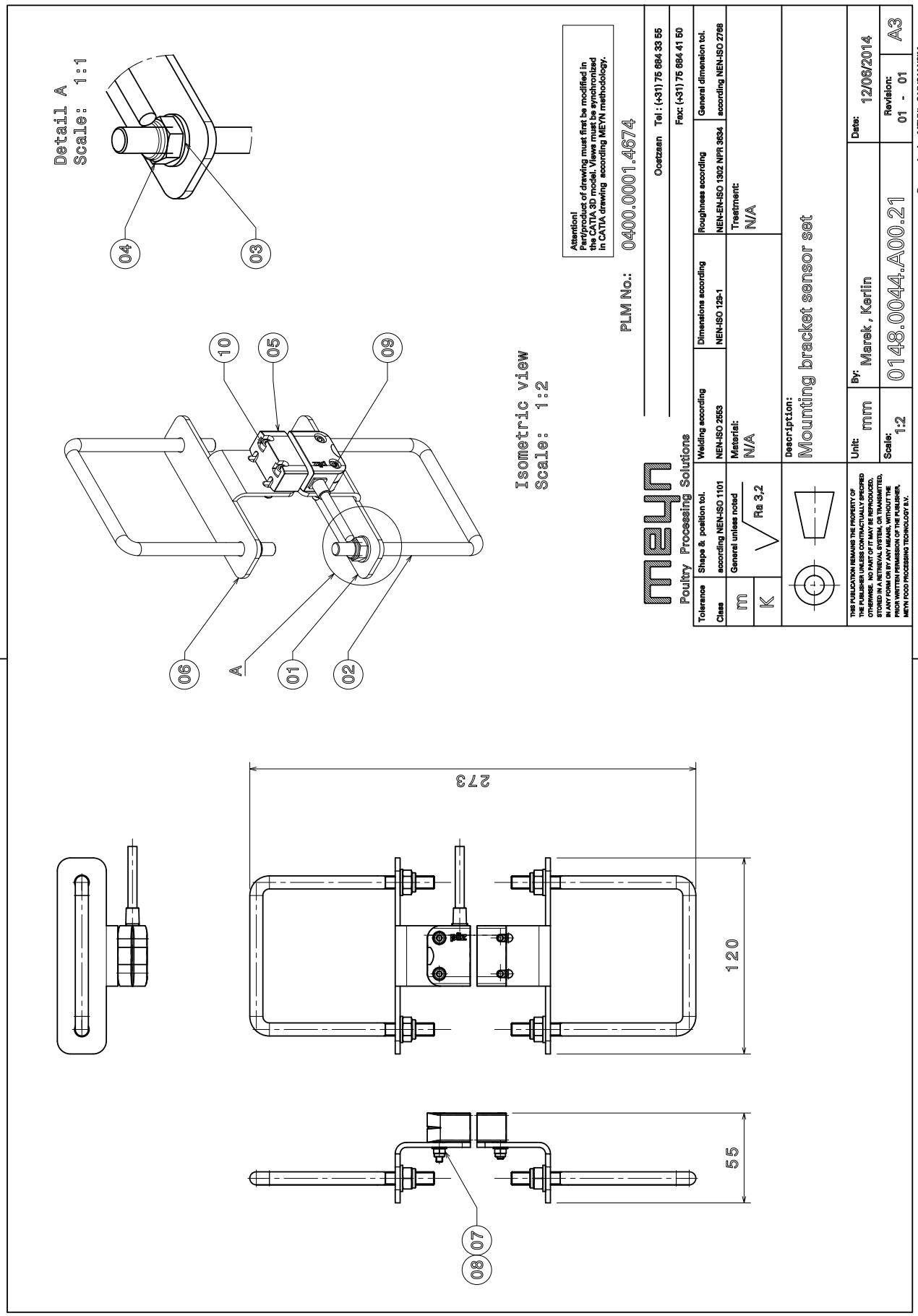
Detail A
Scale: 1:1
04
03
10
05
09
06
A
01
02
Isometric view
Scale: 1:2
Attention!
Part/product of drawing must first be modified in the CATIA 3D model. Views must be synchronized in CATIA drawing according MEYN methodology.
PLM No.: 0400.0001.4674
Oostzaan Tel.: (+31) 75 684 33 55
Fax: (+31) 75 684 41 50
meyn
Poultry Processing Solutions
Tolerance
Class
m
K
Shape & position tol.
according NEN-ISO 1101
General unless noted
Welding according
NEN-ISO 2553
Material:
N/A
Dimensions according
NEN-ISO 129-1
Roughness according
NEN-EN-ISO 1302 NPR 3634
Ra 3,2
Treatment:
N/A
General dimension tol.
according NEN-ISO 2768
Description:
Mounting bracket sensor set
THIS PUBLICATION REMAINS THE PROPERTY OF THE PUBLISHER. THE CONTENTS ARE COPYRIGHT AND OTHERWISE NO PART OF IT MAY BE REPRODUCED, STORED IN A RETRIEVAL SYSTEM, OR TRANSMITTED, IN ANY FORM OR BY ANY MEANS, WITHOUT THE PRIOR WRITTEN PERMISSION OF THE PUBLISHER, MEYN FOOD PROCESSING TECHNOLOGY B.V.
Unit: mm
Scale: 1:2
By: Marek, Kerlin
0148.0044.A00.21
Date: 12/06/2014
Revision: 01 - 01
A3
Prepared using MEYN's CAD/CAM/CIM system.
273
120
55
08
07
-PDF_BW-0148.0044.A00.21-01.01-A3- Tue Jun 24 13:07:11 2014

0148.0044.B00.19 Valve holder - assy

Pos	Article nr	Description	Qty
1	0148.0044.B01.19	Valve support plate	1
2	89.2509.012.0008	BALL VALVE	1
3	89.2387.012.0012	COUPLING, HOSE/1/2"X13/STUNNER	2
4	0990.T071.006.00	Clamping bracket	1
5	89.0914.015.0002	Lock Nut M10	2
6	89.2475.010.0003	Hose nipple 22-32 B13	2

© Meyn Food Processing Technology B.V.

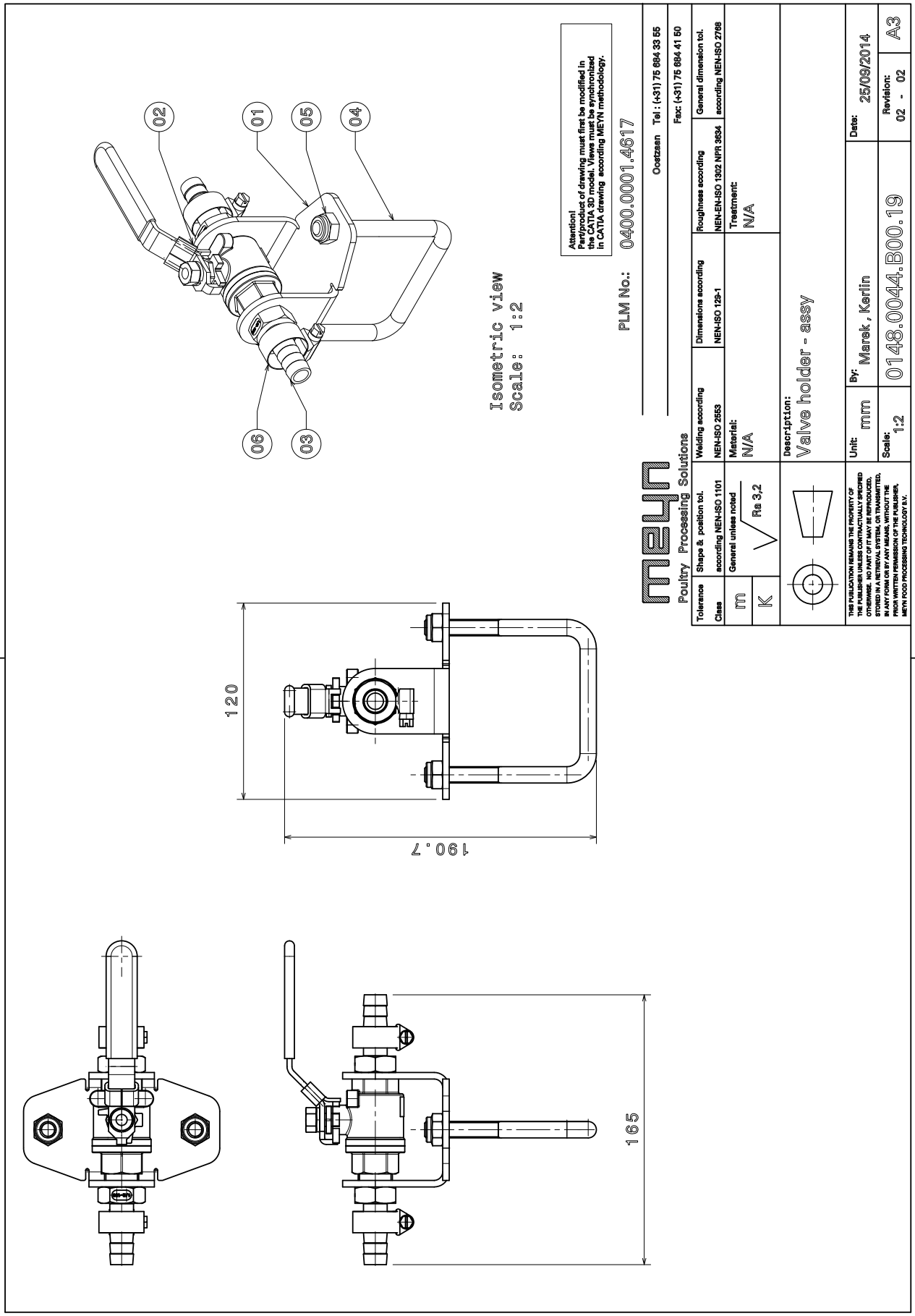
02
01
05
04
06
03
Isometric view
Scale: 1:2
Attention!
Part/product of drawing must first be modified in the CATIA 3D model. Views must be synchronized in CATIA drawing according MEYN methodology.
PLM No.: 0400.0001.4617
Oostzaan Tel : (+31) 75 684 33 55
Fax: (+31) 75 684 41 50
meyn
Poultry Processing Solutions
Tolerance
Class
m
K
Shape & position tol.
according NEN-ISO 1101
General unless noted
Welding according
NEN-ISO 2553
Material:
N/A
Dimensions according
NEN-ISO 129-1
Roughness according
NEN-EN-ISO 1302 NPR 3634
Ra 3,2
Treatment:
N/A
General dimension tol.
according NEN-ISO 2768
Description:
Valve holder - assy
THIS PUBLICATION REMAINS THE PROPERTY OF THE PUBLISHER. UNLESS OTHERWISE AGREED OTHERWISE, NO PART OF IT MAY BE REPRODUCED, STORED IN A RETRIEVAL SYSTEM, OR TRANSMITTED, IN ANY FORM OR BY ANY MEANS, WITHOUT THE PRIOR WRITTEN PERMISSION OF THE PUBLISHER, MEYN FOOD PROCESSING TECHNOLOGY B.V.
Unit: mm
Scale: 1:2
By: Marek, Kerlin
0148.0044.B00.19
Date: 25/09/2014
Revision: 02 - 02
A3
Prepared using MEYN's CAD/CAM/CIM system.
120
190.7
165
-PDF BW-0148.0044.B00.19-02.02-A3- Tue Sep 30 10:10:49 2014

0148.0044.A00.20 TFP electrical box set

Pos	Article nr	Description	Qty
1	0148.0044.A01.20	POK2 mounting plate	1
2	0618.DE03.017.20	CONNECTIONBOX 1x SAFETY SENSOR	1
3	0148.0044.A02.20	Clamping bracket CTC 90 L=130	2
4	89.0914.015.0002	Lock Nut M10	4
5	89.1102.015.0007	SCREW, M4X12/SKT HEAD/CAP	4

© Meyn Food Processing Technology B.V.

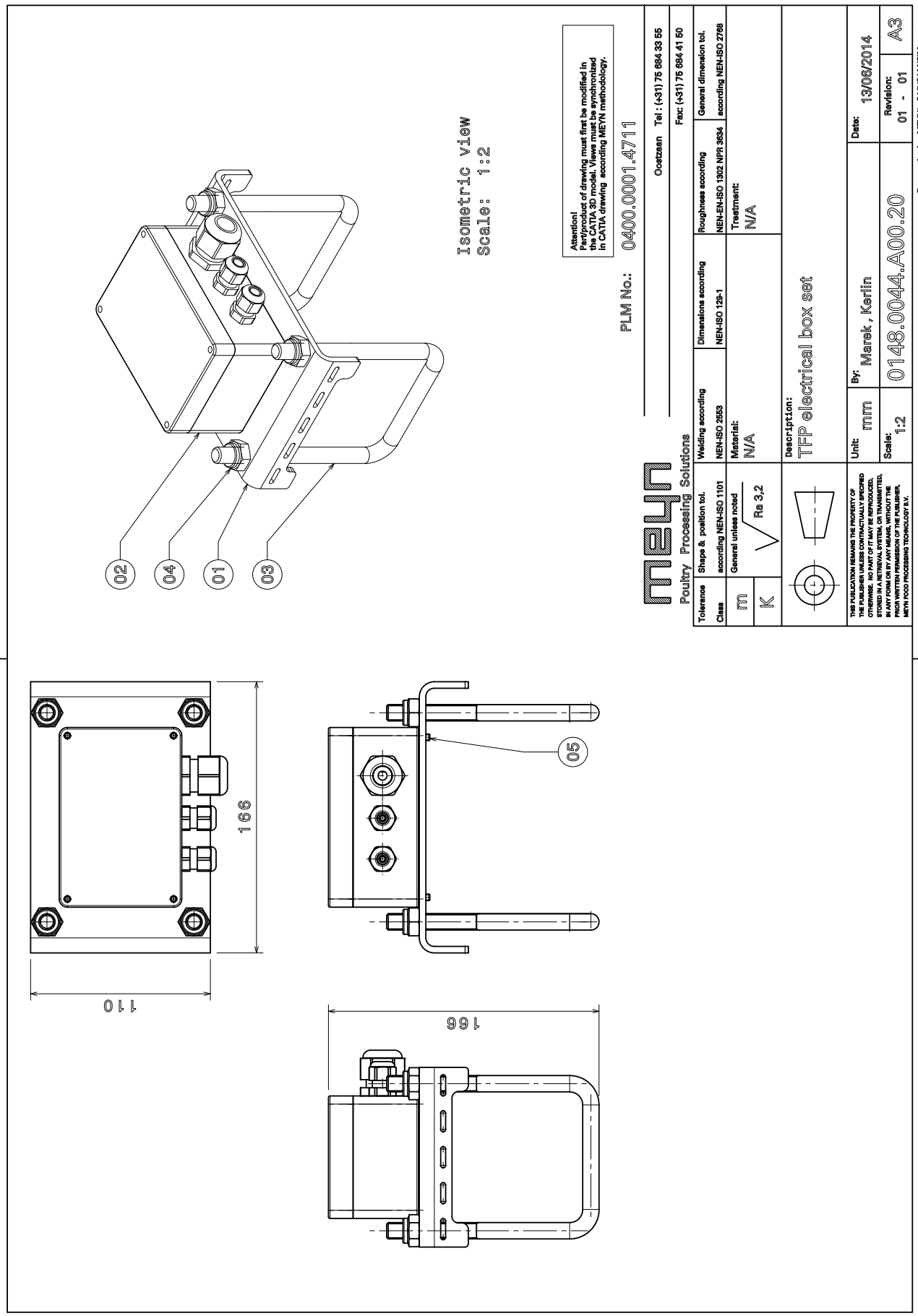
Isometric view
Scale: 1:2
02
04
01
03
05
166
110
166
Attention!
Part/product of drawing must first be modified in the CATIA 3D model. Views must be synchronized in CATIA drawing according MEYN methodology.
PLM No.: 0400.0001.4711
Oostzaan Tel.: (+31) 75 684 33 55
Fax: (+31) 75 684 41 50
meyn
Poultry Processing Solutions
Tolerance
Class
m
K
Shape & position tol.
according NEN-ISO 1101
General unless noted
Welding according
NEN-ISO 2553
Material:
N/A
Dimensions according
NEN-ISO 129-1
Roughness according
NEN-EN-ISO 1302 NPR 3634
Ra 3,2
Treatment:
N/A
General dimension tol.
according NEN-ISO 2768
Description:
TFP electrical box set
THIS PUBLICATION REMAINS THE PROPERTY OF THE PUBLISHER. NO PART OF IT MAY BE REPRODUCED, OTHERWISE, NO PART OF IT MAY BE REPRODUCED, STORED IN A RETRIEVAL SYSTEM, OR TRANSMITTED, IN ANY FORM OR BY ANY MEANS, WITHOUT THE PRIOR WRITTEN PERMISSION OF THE PUBLISHER, MEYN FOOD PROCESSING TECHNOLOGY B.V.
Unit: mm
By: Marek, Kerlin
Date: 13/06/2014
Scale: 1:2
0148.0044.A00.20
Revision: 01 - 01
A3
Prepared using MEYN's CAD/CAM/CIM system.
-PDF BW-0148.0044.A00.20-01.01-A3- Tue Jun 24 13:16:59 2014